Rehabilitation of sewerage

Volume III

The Requirements

VOLUME III

III.i TECHNICAL SPECIFICATIONS

TABLE OF CONTENT

1. GENERAL INFORMATION 7

1.1. Basic information on the construction 7
1.2. Proposed scope of works and expected results 7
1.3. Availability of existing documentation 8
1.4. Geographical location 9
1.5. Geodetic layout 9
1.5.1. Map and geodetic basic data 9
1.5.2. Vertical and horizontal layout of the area concerned 9
1.6. Geological and hydro-geological data 10
1.6.1. Introduction 10
1.6.2. Orographic and geomorphologic conditions 10
1.6.3. Hydrographical characteristics 13
1.6.4. Geological characteristics 15
1.6.5. Geological composition of the terrain 15
1.6.6. Engineering-geological characteristics 16
1.6.7. Hydro-geological characteristics and phenomena 17
1.6.8. Fluctuation of groundwater level 19
1.7. Climatic conditions and seismicity 19
1.7.1. Climate 19
1.7.2. Rainfall 20
1.7.3. Seismic characteristics 20
1.8. Population 21
1.8.1. Present situation 21
1.8.2. Prospective situation 22
1.9. Existing infrastructure conditions 24
1.9.1. Potable water supply 24
1.9.2. Rainwater and sewage water collection 24
1.10. Protected areas and protection zones 25
1.11. Health protection and work safety 25
1.11.1. Working hours 27
1.12. Charges for discharging wastewaters to surface water 28
1.13. Office space 28
1.13.1. General equipment to be provided by the Contractor during the construction period 28
1.13.2. Computer equipment 30
1.14. Construction site 30
1.14.1. Construction site characteristics 30
1.14.2. Construction process 31
1.14.3. Archaeological sites 32
1.15. List of regulations 32
1.15.1. General 32

D.O.O. VODOVOD I KANALIZACIJA DANILOVGRAD VIK
STRABAG AG

1.15.2. Indicative list of regulations 32

2. STANDARD OF MATERIALS, WORKMANSHIP AND EQUIPMENT REQUIRED 34

2.1. General Requirements – Civil part 34
2.1.1. General requirements on civil and building works of the construction 34
2.1.2. Protection of the environment 36
2.1.3. Work safety requirements 40
2.1.4. Handing-over/acceptance of the construction site 43
2.1.5. Demolition works 4544
2.1.6. Earth works 47
2.1.7. Construction founding 5655
2.1.8. Water proofing 57
2.1.9. Concreting and use of reinforced-concrete 59
2.1.10. Sewer connections 67
2.1.11. Piping systems and utility lines outside buildings 68
2.1.12. Ductile iron piping 72
2.1.13. Steel piping 73
2.1.14. Concrete and reinforced-concrete piping 74
2.1.15. Plastic piping 74
2.1.16. Stoneware piping 76
2.1.17. Pipe laying 77
2.1.18. Requirements on sewer systems construction 80
2.1.19. Road works 83
2.1.20. Fencing and landscaping 85
2.1.21. Crossing with lines, roads, railways and water courses 86
2.1.22. Work and operations of temporary character 90
2.2. General Requirements – Mechanical and Electrical part 92
2.2.1. Introduction 92
2.2.2. General 92
2.2.3. Electrotechnical equipment 96
2.2.4. Cabling and earthing 105
2.2.5. Automation Equipments 108
2.2.6. Mechanical equipment 114
2.2.7. Pipes 122
2.2.8. Valves and Cocks 127
2.2.9. Water Meters 135
2.2.10. Pumps and pumping stations 135

3. DETAILS OF TESTS REQUIRED 139

3.1. Introduction 139
3.1.1. General Requirements on the Tests 139
3.1.2. Testing Materials and Equipment 141
3.2. Tests – Civil part 141

D.O.O. VODOVOD I KANALIZACIJA VIK DANILOVGRAD
STRABAG AG

3.2.1. Testing of the water and sewage reservoirs tightness 141
3.2.2. Testing of gravity sewers and branch sewers tightness 142
3.2.3. Testing of sewerage delivery pipes tightness 144
3.2.4. Ovality testing 144
3.2.5. Pressure testing of water pipes 145
3.2.6. Pressure test recording 148
3.2.7. Individual Testing 149
3.2.8. Complex testing 151
3.2.9. Operators' training 152
3.2.10. Trial operation 153
3.3. Tests – Mechanical and Electrical part 153
3.3.1. Tests in Manufacturer's Plant 153
3.3.2. Testing on the construction site 156

4. DETAILS OF ALL WORK REQUIRED TO ACHIEVE COMPLETION 158

4.1. Particular Requirements – Civil part 158
4.1.1. Recapitulation of existing situation and designed scope of works 158
4.1.2. Description of construction works 163
4.1.3. Sewerage System 166
4.2. Particular Requirements – Mechanical part ..... 171~~170~~
4.2.1. Recapitulation of existing situation and required scope of works ..... 171~~170~~
4.2.2. Operating and safety regulations 172
4.2.3. New sewer pumping stations ..... 173~~172~~
4.2.4. Requirements on machinery and equipment of mechanical and electrical engineering units (PS) ..... 174~~173~~
4.3. Particular Requirements – Electrical and SCADA part ..... 175~~174~~
4.3.1. Recapitulation of existing situation and required scope of works ..... 175~~174~~
4.3.2. Common requirements on electrotechnical works 175
4.3.3. Requirements on "LV connection" ..... 180~~179~~
4.3.4. Requirements on "Heavy current distribution" ..... 181~~180~~
4.3.5. Requirements on "Instrumentation and Control (I&C)" 183
4.3.6. Requirements on "Automatic control of technological processes" 184
4.3.7. Requirements on "Sewerage SCADA system" 186

5. PRECOMMISSIONING AND COMMISSIONING ACTIVITIES TO BE PERFORMED BY THE CONTRACTOR ..... 194~~193~~

5.1. Documents before the construction works commencement ..... 194~~193~~
5.1.1. General ..... 194~~193~~
5.1.2. Tender offer ..... 194~~193~~
5.1.3. Occupational health and safety ..... 195~~194~~
5.1.4. Quality management system ..... 196~~195~~
5.1.5. Elaboration of the Environmental Impact Assessment documents (EIA) ..... 197~~196~~
5.1.6. Elaboration of the Preliminary design for building permit (Idejni projekat) ..... 197~~196~~

D.O.O. VODOVOD I KANALIZACIJA VIK DANILOVGRAD
STRABAG AG

5.1.7. Elaboration of the main design for the details for execution of works (Glavni projekat) 199198
5.1.8. Elaboration of contractor's documentation for manufacturing preliminaries of the construction 201200
5.1.9. Work schedule 201200
5.1.10. Passportization (photo-documentation) 201200
5.1.11. Environmental protection in course of construction 202201
5.1.12. Information tables 204203
5.2. Documentation in course of the work implementation 204203
5.2.1. Building log 204203
5.2.2. Photo-documentation (passport) 205204
5.2.3. As-built drawings (Projekt izvedenog objekta) 205204
5.2.4. Test plan 208207
5.2.5. Operation and maintenance manuals (training)), Project of maintenance of facility (Projekat održavanja objekta) 209208
5.2.6. Operating instructions 210209
5.3. Documents for construction hand-over and approval 211210
5.3.1. Documents to construction, technological and electrotechnical works 211210
5.3.2. Documents to ACSTP 212211
5.3.3. Schedule of documents submitting 213212

D.O.O. VODOVOD I KANALIZACIJA DANILOVGRAD VIK
STRABAG AG

1. GENERAL INFORMATION

1.1. BASIC INFORMATION ON THE CONSTRUCTION

Project title:	DANILOVGRAD MUNICIPAL INFRASTRUCTURE PROJECT REHABILITATION OF SEWERAGE
Employer:	D.O.O. "Vodovod i kanalizacija" Danilovgrad
District:	Danilovgrad
Place of construction:	Danilovgrad

The purpose of the "Danilovgrad Municipal Infrastructure Project, Rehabilitation of sewerage" project is to deal with the collection of sewage wastewaters in the town of Danilovgrad through the construction of a separate sanitary sewerage.

This project is to be followed by the "Danilovgrad Municipal Infrastructure Project, Construction of WWTP" project dealing with the treatment of sewage wastewaters through the construction of a new wastewater treatment plant.

The main watercourse draining the Danilovgrad area is the Zeta river.

The implementation of the projects will ensure an improved water quality in the Zeta river into which wastewaters are drained at present without any adequate treatment process. The wastewaters will be brought into the new WWTP. The projects concept is based on the intention to protect the watercourse maximally from being polluted.

The designed activity realisation will form conditions for the infrastructure completion and will promote the development of the area concerned.

1.2. PROPOSED SCOPE OF WORKS AND EXPECTED RESULTS

Presently, the town of Danilovgrad disposes only with a combined sewerage system over a smaller part of its area, with wastewaters being drained directly into the Zeta river. Other sewage wastewaters are treated in septic tanks or seepage wells.

The project subject is the design and realisation of separate sanitary sewerage including public sections of house connections in order to ensure reliable wastewater collection to the Danilovgrad WWTP. The sewerage system will be designed as a gravity type, due to the flat character of the area pumping is expected. The existing combined sewerage system designed for reconstruction will form part of the designed system. The project will include the reconstruction of the existing sewerage system and construction of the dispatching control system. The use of vacuum sewerage and pressure sewerage as a compact system is out of question.

The new designed sewerage system has been divided to 7 zones.

ASSUMED PHYSICAL INDICATORS OF THE CONSTRUCTION:

Structure	Designed ~~Q~~scope~~uantity~~	Built-up scope	Unit
Existing ~~S~~sewerage system reconstruction	3,171	3,171	m
New gravity sewerage system	28,834	5,479	m
Pumping stations	10	5	pc
Delivery piping	1,243	1,174	m

The assumed numbers of physical indicators are only approximate and may differ from a specific design of the Contractor, extent of sewerage must be maintained.

1.3. AVAILABILITY OF EXISTING DOCUMENTATION

This Tender documentation has been elaborated upon the following reference design documentations:

- General design documents „Danilovgrad Wastewater Collection and Treatment". „Generalni projekat kanalisanja i prečišćavanja otpadnih voda Danilovgrada". Prepared by ENERGOPROJEKT-HIDROINŽENJERING ad, Novi Beograd, February 2008.
- "Spatial urban plan of the Municipality of Danilovgrad". Prepared by CEP-Beograd, MonteCEP-Kotor, Planet Cluster-Madrid (Spain) from 2014.
- Main Design Documents „Sanitary sewerage along the M18 reconstructed motorway". „Glavni projekat fekalne kanalizacije u pojasu rekonstrukcije magistralnog puta M18 deonica raskrsnica "Bralenovica petlja"- benzinska pumpa "Europetrol" u Danilovgrada". Prepared by INDEL INŽENJERING, Podgorica, November 2010.
- Conceptual design „Danilovgrad Municipal Infrastructure, Sewerage system". Prepared by VHS Brno, a.s., Brno, April 2014.

Existing design documentations are available for consultation in the Employer's office at the following address:
D.O.O. "Vodovod i kanalizacija" Danilovgrad
Street Address: Caja Scepanovica bb
City: Danilovgrad
Postal Code: 81410
Country: State of Montenegro

Tendereres are strongly recommended to study thoroughly all existing documentation before submitting their bids, as the Tender documents contain only relevant parts of the documentation necessary and sufficient for the design of a technical solution and work appraisal.

Tenderers are responsible for interpretation of data given in existing design documentations and in these Tender documents. Deficiencies, or extrawork resulting from insufficient study or incorrect interpretation of data, shall not be taken into account during the realisation.

1.4. GEOGRAPHICAL LOCATION

The Danilovgrad district is situated in the central part of Montenegro. The district area is located between 18°56´ and 19°18´ east longitude and 42°48´ and 42°45´ north latitude. The majority of the district territory is hilly or mountainous, a small part is formed by the Zeta river valley and its tributaries, i.e. Bjelopavlićka plain.

The Danilovgrad district territory covers 50,100 ha, while the size of the urban area included in the urbanistic plan is around 250 ha. The district is bordered by these districts: Podgorica in the south, Cetinje in the southwest and west, Nikšić in the west and north, and Kolašin in the northeast. The total length of the district border is 154.5 km.

The air distance of border points in the district in the north-south direction is 33 km, and in the east-west direction 29 km. The district covers 501 km^2, belonging to medium-size districts within Montenegro.

Geographical location of the district may be considered very suitable because it lays close to the country capital Podgorica, the royal town of Cetinje, and an important economic centre and second biggest town of the country Nikšić.

The location was considered favourable in history, too, in the early middle-ages important trade routes ran through this territory, in valleys of the Zeta and Morač rivers, along which the first urban settlements were founded: Duklja (Doclea) at the confluence of Zeta and Morač, Ribnica at the confluence of Ribnica and Morač, Martinićka Gradina on the Bjelopavlićka plain close to Spuž, Spuž fortress, and Onogošt on Nikšićko polje.

1.5. GEODETIC LAYOUT

1.5.1. Map and geodetic basic data

The following map references have been used for the elaboration of these Tender documents:

- Digital terrain model of the urbanistic plan
- Cadastral map

The map basic data are part of the existing design documentation specified in chapter 1.3.

1.5.2. Vertical and horizontal layout of the area concerned

The vertical and horizontal layout of the area concerned for sewerage system is not available.
The Contractor's delivery shall include the elaboration of the vertical and horizontal layout of the area concerned for sewerage system in the scope and detail required by relevant regulations.

When elaborating their bids, tenderers are obliged to take into account all risks resulting from the current condition of geodetic data.

1.6. GEOLOGICAL AND HYDRO-GEOLOGICAL DATA

1.6.1. Introduction

The engineering-geological survey of the area concerned for sewerage system is not available.

The Contractor's delivery shall include the elaboration of engineering-geological and hydro-geological surveys of the area concerned for sewerage system in the scope and detail required by relevant regulations.

The geological survey shall include field and laboratory tests (e.g. static and dynamic sounding, static loading tests, hydrodynamic tests determining hydraulic parameters of the rock environment, determination of strength, deformation, and technological properties of rocks, determination of workability classes, determination of chemical properties of water intended for construction purposes – aggressiveness to concrete, steel, etc.).

Expenses on this survey shall be considered to have been included in the tenderer's bid. The Employer shall not accept any expenses related to engineering-geological and hydro-geological surveys.

All data and values provided in this chapter "1.6. Geological and hydro-geological data" are informative only, helping tenderers in the elaboration of their bids. Each tenderer shall bear the responsibility for the proposal design.

1.6.2. Orographic and geomorphologic conditions

The Danilovgrad district territory extends from the Bjelopavlićka plain in the Zeta river valley to Old-Montenegrin karst plateaus in the southwest and to high limestone mountains and plateaus in the northeast.

Regarding topography, two basic complexes should be mentioned: flat country along the Zeta river and its tributaries, and mountainous terrains, both extending in the Dinaric direction (i.e. northwest-southeast).

Tectonic changes are most significant in the Plana region, in an area extending from the Zetsko-Bjelopavlićka plain to Nikšićko polje. Vertical division of the space is pronounced and elevation of the district ranges from 35 m in the Mareza river valley, 60 m at Glava Zeta, 1,436 m in Veli Garač (Milunova Bobija peak), 1,927 m in Prekornica (Kula peak), to more than 2,100 m in southern parts of Maganik.

A complicated lithologic system, tectonic activities together with fluvial, karstic, and glacial erosion, as well as anthropogenic effects had created the present relief of the Davnilovgrad district area.

A part of the district belongs to areas with average elevation 800-1,000 m, representing the lower part of the mountainous region of Montenegro, being a typical karst landscape, so-called "sharp rocky landscape" or "full karst" with developed surface and underground karst formations. Within this extensive limestone and dolomite area (Katunske grede), which gradually descends along the Dinaric direction towards the Skadar depression, the only places enabling settlement, agriculture and cattle breeding are ravines and larger basins

D.O.O. VODOVOD I KANALIZACIJA VIK DANILOVGRAD
STRABAG AG

formed in places where limestone meets less permeable rocks (dolomite and flysch). The highest features in this area are two massifs: Mali Garač, reaching height above 880 m, and Velji Garač with the highest mountain Milunova Bobija (1,436 m), towering steeply above the Bjelopavlićka plain. These massifs are divided by Dolovi pass at 675 m. The northeast slopes of Garač, in the Zagreda area, is formed by smaller mountainous plateau reaching to 300-400 m above sea level. In higher elevation, the Garač massif is covered with woods, while other parts are covered with lower vegetation.

In the valley forming the central part of Montenegro, where the Zeta and Bjelopavlićka plains, Nikšićko polje, and Duga pass are situated, the landscape structure is profoundly relief-feature. It descends and widens from northwest towards southeast and opens towards the Adriatic, from where the Mediterranean climates enters the country. The Bjelopavlićka plain with Nikšićko polje and Zeta plain are the lowest parts of Montenegro continental territory, separating the rocky plateau from high mountainous areas. The Bjelopavlićka plain is an extensive flat area along the lower course of the Zeta river, representing a tectonically predisposed depression of a rocky plain characteristics, 28 km long and 8 km wide, with the total area of 72 km2.

In the Pleistocene period, a lake was situated in this area, formed by sedimentation of strong quaternary sediments. The Bjelopavlićka plain morphology has tree main forms: plain and alluvial plain, such as the valley part of the Zeta river and its tributaries; elevations in the valley bottom, representing the remains of the paleorelief; and the Zeta riverbed. The valley river bottom descends slowly from Glava Zete with elevation 56 m, to the Brestica and Zeta confluence with elevation of 40 m. Limestone hills and points towers from the quaternary sediments in the Zeta river valley, as the paleorelief remnants. The most significant are Gorica between Kujava and Frutak (152 m above sea level), Kurilo and Orja Luka (270 m), Ćeranića glavica and Tulica near Danilovgrad (127 m), Spuška glavica (170 m), and a group of hills near Podglavica: Visočica (154 m), Maljat (127 m), Merat (100 m), and Dugačka glavica (70 m). The Zeta riverbed divides the plain to two almost identical parts, being mostly wedged into earthy and sandy quaternary sediments. In individual places the riverbed is wedged into limestone paleorelief remnants, but only on one its side, for example near Gorica in the Tvorila area, or at Čeranića glavica near Danilovgrad. The average width of the Zeta riverbed is 50 m, the biggest 90 m at Slap.

The right side of the Bjelopavlićka plain includes some river terraces, which did not develop during tectonic elevation, at Katunska rocky plateau (Katunska kraška zaravan): Mareza, Zagreda, Bogetići, and Cerovo.

Between Prekornica and Ostroška greda, a limestone plateau is situated at the same elevation as the Katunska rocky plateau, containing ravines Dubravica, Jablan, Topolovo, Brajovićko, and Martinićko Gostilje, and numerous depressions.

The northern part of the district is formed by high mountains, Prekornica with the highest peak Kula (1,927 m), Maganik reaching over 2,100 m and Lisac (with 1,563 m high Bobija peak) in the south and southeast parts, and areas between them. Prekornica extends between the Gračanica valley, Nikšićko polje, Bjelopavlićka plain, and Morača and Maganik valleys. It consists mainly of limestone and dolomite, with profound karst erosion area with

VODOVOD I KANALIZACIJA D.O.O. VIK DANILOVGRAD
STRABAG AG

strongly rugged topography, with Srednja, Suva, and Brajovićka ponikvica ravines and numerous depressions situated between sharp ridges. The fragmented Maganik massif is situated in the northernmost part of the Danilovgrad district, and consist especially of cumulated limestone. The Štitovo plateau in the western edge of Maganik, with elevation 1,500 m, is rich with red bauxite deposits. South of Štitovo, a tectonically predisposed Gračanica (Nikšićka Župa) valley is situated, but only its eastern, the highest part belongs to the district. Lisac, extending in the north-south direction, represents a smaller limestone massif.

Regarding hypsometry, the most extensive are terrains with elevation 200 m above sea level, occupying 72 %, while terrains with elevation over 600 m above sea level occupy 56 % of the district area. Terrains with elevation below 600 m, having favourable climatic conditions, long-lasting vegetation season, abundance of fertile soil rich in water, belong to territories with permanent settlement. They occupy over 200 km2, which is 43 % of the district area.

Height zones represented in Danilovgrad district:

Elevation – height zones	% of territory
35 - 200 m	28
200 - 600 m	16
600 – 1000 m	21
1,000 – 1,400 m	20
over 1,400 m	15

Significant vertical division of the Danilovgrad district area caused also various terrain descending. The largest part is occupied by flat terrain with gradient up to 5 % (approx. 25 %). Terrain with gradient 5-10% occupies 23 % of the area, terrain with gradient 10-25 % occupies 19 %, with gradient 25-50 % approx. 21 %, and steep terrain with gradient over 50 % occupies as much as 12 % of the district area.

From the genetic point of view, several types of relief may be found in the district: karstic, fluvial-karstic, fluvial-denudational, fluvial-accumulative, and glacial.

The karst relief is characteristic with carbonate rocks, occurring mainly in a part of the Starocrnogorska zaravan (Old-Montenegrin plateau), and on and nearby the Garač mountain. This is a zone of "sharp" rocky landscape, or typical full karst. It prevails also in an area of high mountains and plateaus between them.

The fluvial-karstic relief is represented mainly by valleys and fluvial-karstic forms as the product of corrosion, erosion, denudation, and accumulation. The Bjelopavlićka plain, as part of a larger karst depression, is of s polygenetic origin, therefore it is predisposed and ahs the character of a karst plain. The fluvial-karstic relief is represented also in chalkstones of Prekornica and Maganik in the form of ravines, depressions, dry valleys, and fossil riverbeds.

The fluvial-denudational relief is represented in the Bjelopavlićka plain.

The glacial relief has been preserved in the area of high mountains and plateaus, represented in the district area by Prekornica and Maganik mountains and Štitovo plateau, in the form of cirques, glacial branches, unstaggered rocks, and moraine detritus.

Since the prevailing part of the Danilovgrad district area is formed by carbonate rocks, the most common are limestone-dolomite relief. Surface karst forms of this relief include: grikes, deep grikes, sinkholes and ravines, Underground forms include: caverns and abysses. Grikes of all types, or shapes, are found especially in Katunski krš, in Prekornica and Maganik. Deep grikes, which are larger than usual grikes, are found in the same areas as grikes. Sinkholes and ravines of all types and sizes, such as depressions in karst terrain, represent a common form of relief in karst areas of the district. They are usually related to places in which contact between rocks with different petrographic composition and hydro-geological functions had occurred, and extend mainly in the same direction as individual layers. Although the Bjelopavlićka plain has the character of a karst terrain, this type of terrain is not found within the Danilovgrad district. Caverns and abysses, as underground forms of the relief, are found over almost the whole district. They occur in places with fissures where limestone meets other rock types. Several dozens of caverns and abysses have been discovered within the district, out of which only a small number have been surveyed. It shall be pointed out, that these caverns and abysses are rather interesting from scientific point of view, because these are specific ecosystems offering new species, subspecies and varieties of especially entomofauna to be discovered. Numerous caverns and abysses situated in the Danilovgrad district have a hydro-geological function in the form of sinkholes, springs, wells and orifices. They occur in places with fissures where permeable and impermeable rocks meet, in beds of permanent water courses, and in paleorelief places under quaternary deposits.

Heterogeneous types of relief, their richness and representation in the area, make the natural and landscape values of the Danilovgrad district beautiful and special.

1.6.3. Hydrographical characteristics

There are several water courses in the Danilovgrad district, which flow – through Zeta, the biggest and most important of them – to the Adriatic. The Zeta river flows into the Morača river and then to the Skadar Lake, from which the Bojana river flows to the Adriatic.

The main hydrographical characteristics of the district are a large number of water courses and springs in the Bjelopavlićka plain and in hilly and mountainous areas along the plain edges, and a complete absence of surface water courses and larger springs in the Garač territory, and only several smaller water courses in the Prekornica area and southern slopes of Maganik which disappear underground after a short while and flow in the form of underground courses mainly towards the Bjelopavlićka plain.

The Zeta river is the main water course within the whole extensive region. It collects water from all other water courses and hydrological phenomena within the district, as well as some water from confluences located outside the district. As Gornja (Upper) Zeta it flows across Nikšićko polje, where it sinks, and as Donja (Lower) Zeta it reappears below Bogetići in the north-westernmost corner of the Bjelopavlićka plain. The Donja Zeta starts at Glava Zete,

where it is formed by the confluence of Oboštica and Glava Zete, and then flows through the Bjelopavlićka plain south-eastwards 51 km before it confluents with Morača. Its average width is 45-50 m, the biggest width 90 m at Slap.

The drainage area of the Zeta river is 1,215.8 km^2 and average precipitation in its drainage area 2,387 mm/year. The drainage area of Oboštica and Glava Zete is 1,050 km^2 and of Donja Zeta 620 km^2, which means that the total drainage area of the Zeta river is 1,670 km^2.

The average value of Zeta's annual flow in Danilovgrad area is 78.49 m^3/s. When taking into account average annual flow in Podgorica station on the Morača river downstream from the confluence with Zeta (161.90 m^3/s) and in Zlatica station on the Morača river upstream from the confluence with Zeta (58.55 m^3/s), the resulting Zeta average annual flow in its confluence with Morača is 103.35 m^3/s.

The highest average monthly flow is in December (134.69 35 m^3/s), while the lowest in August (15.04 m^3/s). The water level in the Zeta river and its tributaries changes throughout the year. The highest level is during the heaviest autumn rains, a little lower it is in the early spring with snow thawing. In summer, the water level decreases significantly, some smaller courses even dry out. The highest level ever recorded at the bridge in Danilovgrad was 46.25 m (8 Nov 2000), and the maximum flow 463.0 m^3/s. The lowest water level was 33.97 m (5 Aug 1984).

The right-side tributaries of the Zeta river are Dobrun, Svinjički I Milojevića springs (S. and M. Vrela) and occasional water courses Smrdan, Gračanica, and Sušica. Left-side tributaries are Vidoštak, springs in Mandići, Belanovića vir, Dobro Polje spring, occasional water course Sušica, Viško vrelo, Tamnik, Vrela Bogićevićka, Morava, Buk, Ljutotuk, Rimanića stream, Brestica, and Iverak.

With intensive precipitation during the rainy season, groundwater in some parts of limestone-dolomite terrain along the plain edges accumulates in significant quantities. Sudden discharge of this occasional as well as stable water to the surface causes increase of water level in rivers and floods in areas situated along these rivers. The length of flooded areas (around 500 ha) along the Zeta river is 25 km. The Sušica river floods an area of 150 ha, 5 km long. The Rimanić stream floods an area of 50 ha, 5 km long. Floods around the Zeta river are heavy in a location called Dobro Polje and below the Kujava village, because the river has very low banks here. In the urban area of Danilovgrad, both upstream and downstream from the existing bridge, the Zeta river floods low-situated areas along its left bank. Further it floods a depression on its right bank, close to the Ćurilac settlement, downstream from Danilovgrad. Other tributaries cause floods, too, such as Mlinštak brook, flooding more extensive areas.

High average precipitation, geological composition of the ground and its configuration are the main aspects for forming marshes which are highly abundant in the flat country. In autumn, winter and spring the ground gets over-saturated with water, which prevents it from being cultivated.

Apart from floods, the Zeta river also undermines its banks in some parts. This is rather frequent in urban areas of Danilovgrad and Spuž, especially in places with banks made of

D.O.O. VODOVOD I KANALIZACIJA ViK DANILOVGRAD
STRABAG AG

loose materials and hence susceptible to erosion. In some parts the banks keep collapsing in a large extent (Dobro Polje, below Glava Zete).

The existence of a small lake in the Srednja Ponikvica settlement should be mentioned. The lake is formed in a depression in the northwest part of the settlement and is fed with waters from eastern slopes of the ravine. It is important regarding water supply to surrounding settlements and increasing the landscape value, and it is also the only mountain lake in the district. It may be threatened especially by eutrophication.

An artificial lake was formed on the Zeta river at Slap by the construction of the "Slap Zete" hydraulic plant. It serves especially for energy purposes, but is also important for leisure activities and for balancing the flow.

Hydrological documents for the Zeta river at Danilovgrad water-meter station, obtained from the Hydrometeorological Institute of Montenegro for 1948-2001, indicate that the lowest flow during the period monitored was recorded in 1956 (4.68 m^3/s), then in 1984 (4.77 m^3/s), in 1965 (4.9 m^3/s), and in 2000 and 2001 (5.58 m^3/s).

The highest flow during the period monitored was recorded in 2000 (577.0 m^3/s), then in 1966 (550.0 m^3/s), in 1965 (544.0 m^3/s), in 1964 (491.0 m^3/s) and in 1994 (480.0 m^3/s).

1.6.4. Geological characteristics

Neotectonic characteristics of Montenegro

An important role in the structural-tectonic forming of Montenegro terrain was plaid by processes and tectonic activities occurring from Neocene until the preset times. In the Miocene period, the majority of the inner Dinarides was covered by the Pannonian Sea and it is in these places where Neocene sediments are to be found.

The highly accurate present measuring shows that some parts in the Dinarides, Albania and Italy somewhat diverge. These movements have been causing permanent tectonic activities of the continental, but especially submarine parts of Montenegro, resulting in earthquakes exceeding 5 Richter degrees. The neotectonic activities undoubtedly affect the Danilovgrad district area.

1.6.5. Geological composition of the terrain

Regarding the stratigraphic and lithologic characteristics, there are three types of terrain:

Mesozoic carbonates are represented especially in hilly and mountainous parts of the district, and also in the Zeta river valley, or riverbed, up to the highest peaks. They are found in the northeast part of the district at Prekornica and Lisac, in the southwest part in the Velji and Mali Garač area. The Mesozoic carbonates are composed especially of grey-white, grey, and grey-yellow limestone, dolomite limestone of the Triassic, Jurassic and Chalk periods.

Paleogene sediments are represented in some parts of the Zeta riverbed and banks. In large formations they may be seen as strip, e.g. at Zagorak, Frutak and Tvorila, in areas around Pješivci, in the south-west part of the district, and around Bare Šumanovića, Vinići, Brijestovo, Slatina, Glizica, Donji Martinići, Piperi, and in the north-east part of the Bjelopavlićka plain . Further they are represented in a large extent in the zeta river valley,

D.O.O. VODOVOD I KANALIZACIJA VIK DANILOVGRAD
STRABAG AG

visible in the terrain only in places where Paleogene sediments got to the surface through quaternary deposits, such as near Spuž. They are grey, bluish, and red marls, soils and sandstones.

Quaternary sediments are represented in the Zeta river valley bottom, but they cover also high carbonate terrain. Loamy, loamy-sandstone and sandstone sediments, limestone limnic sediments, alluvial sediments, terrace drifts, deluvial sediments and facies of dead branches are represented in the Zeta riverbed.

Regarding granulometric aspects, the finest material is deposited downstream from the edges of the Bjelopavlićka plain in which there used to be a lake. There is over ten metres of this material in the central parts of the "dale" bottom. Glacial and fluvial-glacial sediments are represented in smaller areas in higher parts of the terrain: Studeno, Topolovo, Ivanj ubao, Borov Do, Poljica, Gostilje, Rujišta, Štitovo and other places.

1.6.6. Engineering-geological characteristics

The geological environment of the Danilovgrad district area is characteristic with the terrain stability, rock bearing capacity, and according to the conditions for the construction divided to three groups:

Consolidated rocks are represented by two subgroups.

The first subgroup consists of stony carbonate rocks, most common in the district. They are found on slopes and smaller hills in the zeta river valley. They are limestone and dolomite, carbonate, firm and well-petrified rocks with high strength and stability which, thanks to their resistance to pressure and slipping, form stable terrain suitable for surface construction. Thanks to the properties mentioned they have high bearing capacity even in steep terrain. However, rocks with lower bearing capacity due to surface disintegration may be found.

The second subgroup consists of rocks of the Paleogene lithologic complex. They are characteristic with significant changes in engineering and geological properties. Marls, primarily dry and not disintegrating, have a good bearing capacity and make the terrain stable. If located on larger slopes or in eluvial zones, they may have strongly unfavourable engineering and geological properties such as low bearing capacity, terrain instability, and proneness to erosion effects, which may result in earth-slides of various extent. Earth displacements were observed in zones with flysch damaged by erosion around building structures and especially under crushed limestone.

Semi-consolidated rocks are formed by soils. The soil occurrence affects the groundwater movement and content. Soils are hydro-geological insulators and may contain large quantities of water. With a higher content of water, the soil bearing capacity decreases. They are prone to erosion effects. With the exception of boggy sediments, soil has the lowest bearing capacity of all rocks in natural conditions. They are most frequent in areas with gradient up to 5°, where they form a stable environment for adequate loading and construction of smaller building structures for which earth settlement is not an important aspect. Unpetrified, plastic soils with various physical and chemical structural properties are practically impermeable.

D.O.O. VODOVOD I KANALIZACIJA DANILOVGRAD VIK
STRABAG AG

Unconsolidated to semi-consolidated rocks are formed by a lithologic quaternary complex, especially in the form of soils and sandstones. These are fine-grained, plastic sediments and consolidated unpetrified rocks with various physical and chemical properties. They usually permeate water only slightly or not at all .Since they occur in flat parts of the district, they create stable conditions for construction. They may be expected to have highly varying bearing capacity due to the composition of sediments and groundwater occurrence.

In some parts of the area, consisting of semi-consolidated and unconsolidated rocks, it is necessary to secure excavations against backslide, especially when the rock mass contains water. Further, excavations shall be drained at a high groundwater level or heavy precipitations. In any case, a geotechnical survey of the location concerned shall be executed so that data on engineering and geological properties are absolutely accurate.

1.6.7. Hydro-geological characteristics and phenomena

The most common sources types in the Danilovgrad district area are karst springs, situated according to the hydro-geological division of Montenegro in the area of "Karst fields, plateaus, and high mountains (Visoki krš and part of the Durmitor tectonic unit [Durmitorska tektonska jedinica])". Within the area of this extensive typical karst territory, numerous sources of karstic spring water are situated in the form of springs, orifices, and effluxes along the edges of karst fields and river valleys. The largest part of the Danilovgrad district belongs to a karst terrain with highly complex and partly undetermined directions and effluent modes. For the Plana territory, springs bordering the district territory are also important, and are connected to it hydro-geologically. Also sources formed within the quaternary glacial-fluvial and alluvial sediments are of significant importance.

The Old-Montenegrin plateau (Starocrnogorska zaravan) source is situated between the drainage areas of the Bay of Kotor (Boka Kotorska), Crnojevića river, and Nikšićko polje, and wells out through numerous occasional and permanent springs and orifices in the western edges of the Bjelopavlićka and zeta plains, the most important being Drenovštički izvori: Svinjačka and Milojevićka vrela, and Dobrik. It is assumed that the drainage area of these springs is around 120 km^2. Ground waters in this drainage area flows globally eastwards. It is possible that some water of the Oboštica drainage area occasionally flows towards Drenovštički izvori. Hydrometric measurements showed that the minimum yield of these springs (without Dobrik) is 253 l/s.

Zeta's tributary Gračanica is formed from springs situated below Pješivački Dol. The Šarena ploča orifice is located in the Gračanica riverbed at the bridge, and an orifice zone downstream. When Gračanica stops flowing due to a low water level, some water from Zeta begins to flow upstream through the riverbed and sinks in open limestone channels.

The Sušica river wells out below Dubrava Zagredska. At high water level, it is fed from numerous springs and orifices in its riverbed. The most yielding one is Modro oko, situated most upstream, which dries out completely in summer. Along its riverbed, Sušica is occasionally fed from Grgurovo and Šabovo oko, from a spring by Petra Šunjina bridge, from Podžgajska and Oraška jama. The most important occasional source of the Sušica river is the Oraška jama orifice. With its yield and favourable location it is the most important source

VODOVOD I KANALIZACIJA d.o.o. ViK DANILOVGRAD
STRABAG AG

for supplying the Bjelopavlićka plain with water. The Oraška jama drainage area includes the Garač massif and territory westwards from it up to Čevo, formed completely by Mesozoic limestone, where underground karst channels of large dimensions are situated. The only occasional source in the Pipersko lokanje drainage area above Zagreda, an the only permanent and most yielding source is Orlujina. The karsting process got deep under the Zeta river valley, due to which large accumulations of groundwater were formed under Garač. Surveys proved the presence of an underground course between the river sinking at Čevo and at Oraška jama, and the air distance between them is around 14 km. Water moved through the underground channels at 5.34 cm/s. Generally, water moves in the underground channels westwards. The Oraška jama spring and the water level in the dry season show that there is a large groundwater accumulation, because even with pumping of 125 l/s during the dry summer season no significant decrease of the water level occurred.

South of Oraška jama and Podžgajska jama, the Vučji Studenci drainage area is situated. These, together with Modro oko and Baločka pećina, form parts of the Matica river springs, which flows to Morača at Botun. An obituary of Matica is the Crkovnica river which is fed from a permanent source Kraljičino oko and Crno oko. Kraljičino oko, together with the Mareza spring, is the only more yielding permanent source in this part of the district. Underground courses of Daljam and Zorski lug flow towards Kraljičino oko at the rate of 2.15 km/day.

The karst source of the Mareza river is drained by gravity through a number of springs. Neither the Daljam and Zorski lug territory nor Garač belong to the Mareza drainage area. Water in its drainage area is expected to flow generally from north to south. The only known fact is that this is a large and deep groundwater accumulation. Previous surveys did not prove reliably where the drainage area of these springs is situated, although an analysis of hydrological data indicates that this drainage area may be situated within the Prekornica karst area. However, this has not yet been proved by tests.

The source of the Rudine, Zla Gora, and Njegoš areas includes a large karst territory without any surface effluent and with rare and occasional springs. The effluent is provided partly by the spring of Donja Zeta.

A permanent, more yielding left-side source furthest upstream of the Zeta river are Rožačka vrela. In Bjelanovića vir, on the bottom of the Zeta river valley, so-called Bjelanovića vir is situated, a rare hydrological phenomenon which sometimes changes to a spring or even river sinking. It has been entered in the expert literature as an example of a new definition of orifice.

The source of the Žurim and Štitovi massif includes an extensive karst area east of Nikšićko polje. This karstic fissure-type of spring is drained through Dobropoljski springs, which was confirmed by colouring the water sinking in a place called Bare Bojovića. These springs are yielding even during the driest season, at a higher water level they get flooded by the Zeta river.

The Prekornica massif source: The drainage area of this source is situated northeast of the Bjelopavlićka plain within the Prekornica massif. It is drained through a number of yielding springs along the north edge of the plain: springs of the Sušica river in Mijokusovići, Viško vrelo, Tamnik, and Lalevićko vrelo. Of a special significance is the system of Slatinski izvori,

VIK DANILOVGRAD
STRABAG

water from which is used for the Danilovgrad water supply system, the first to have been constructed in Montenegro.

Podgajska jama, Lakića jama, Vujića jama, Brajovića jama, Žarića jama, Vukovića jama, Straganičko oko and other springs drain the northeast part of the Zeta river valley.

Groundwater of the Bjelopavlićka plain alluvium are of a local significance. Soils and sandstones are only slightly porous, hence their yield is low.

An important aspect of the water quality and protection is, that the hilly and mountainous karst territory of the district contains no structures and no activities dangerous for the environment, especially soil and groundwater.

Of a considerable significance for the Danilovgrad district are also hydro-geological phenomena in Nikšićko polje, where the Zeta river and other courses sink and later reappear in the northwest part of the Bjelopavlićka plain.

1.6.8. Fluctuation of groundwater level

The Contractor's works shall include also the execution of an engineering-geological survey, incl. a hydro-geological survey, in order to obtain knowledge about the occurrence of water underground, and permeability of soils and rocks.

The hydro-geological survey of the area concerned shall be executed in a required scope and detail in compliance with relevant regulations, focused especially on:

- Course and fluctuation of groundwater level.
- Verification of physical and chemical properties of groundwater.
- Assessment of groundwater aggressiveness to steel and concrete structures according to valid legislation.

1.7. CLIMATIC CONDITIONS AND SEISMICITY

1.7.1. Climate

The southern part of the Montenegro and the Zetsko-Bjelopavlićka plain has Mediterranean climate. Hot dry summers and relatively mild rainy winters are typical for this area. January temperature is lower in Danilovgrad than in coastal locations at approximately same latitude, while summer temperature is little higher. This is typical especially for the extensive valley of the Zeta river with the highest summer temperatures within the whole country. The reason for this is a very clear sky during summer, heating the earth and air above it.

In mid-July 2007, a hot dry air from Africa reached this territory, bringing extremely warm weather all over the Balkan Peninsula. On 18 July, the absolute maximum temperature was measured in Danilovgrad ever since it had been recorded: 42.2 °C. Until then the highest temperature recorded had been approx. 10 °C lower.

There are numerous meteorological station all over Montenegro, performing permanent measurements and monitoring all parameters since 1949. According to their purpose, these

D.O.O. VODOVOD I KANALIZACIJA VIK DANILOVGRAD
STRABAG AG

stations are divided to three groups: main or synoptic, climatologic, and rainfall stations. There is one meteorological station in Danilovgrad area.

1.7.2. Rainfall

Upon monthly measurements from 1955 to 2005 it may be stated that there is a high unevenness in rainfall in individual years. On an average, the lowest rainfall is in summer months (June, July, August), while the highest rainfall is in the winter season (November, December, January). An average number of days with rainfall equal to or higher than 0.1 mm is 13.6 in November, 12.8 in December, and 11.9 in January. The lowest number of such days is in July – 6.0. The following table shows specification of the average rainfall intensity in 1955-2005 upon data from the Hydrometeorological Institute of Montenegro.

Month	Jan	Feb	March	April	May	June	July	Aug	Sep	Oct	Nov	Dec
Rf (mm)	20.8	20.3	17.2	15.8	10.9	10.0	9.3	13.5	20.5	24.9	25.1	23.3

The data show that the rainfall intensity is higher in cold winter months than in warm summer months.

According to data from a meteorological station in Danilovgrad, the maximum daily rainfall in 1995-2005 was between 76 and 250 mm.

1.7.3. Seismic characteristics

The Danilovgrad district seismicity is influenced mainly by numerous autonomous seismogenic focuses in Montenegro as well as by a high number of seismogenic zones within the western Balkans, especially those situated in southern Croatia, eastern Herzegovina, northern Albania, southern and south-eastern Serbia. Seismic territories with a significant activity within Montenegro are the seismogenic zones around Ulcinj and Bar, Budva, Brajići, Boka Kotorska, and also area around Berane, the whole area around the Skadar Lake, Maganik, etc.

A temporary seismologic map recording the past 500-year period and containing the expected maximum earthquake intensity in conditions of the so-called firm earth surface, is the result of elaboration of all available data on seismicity recorded within Montenegro and its surroundings. The prevailing period is from the early 20th century to late 1984, and effects of determined potential seismogenic focuses within the territory. The map contains also all relevant information on destructive and catastrophic earthquakes within the wider area from the Middle ages to the present times. According to this map, the district area belongs to a zone with possible earthquakes of 8 Richter degrees.

Data in the seismo-tectonic map with mechanisms of focuses of stronger earthquakes in last 30 years indicate that the Danilovgrad district area has been under the significant influence of seismic activities occurring in the zone around the Skadar Lake, Primorje. There have been also earthquakes recorded near the town of Podgorica, in the Morača canyon, in Nikšić, and in the Maganik zone. Seismogenic landslide, or a fissure extending through the

D.O.O. VODOVOD I KANALIZACIJA DANILOVGRAD ViK
STRABAG AG

Bjelopavlićka plain along its length, is also obvious. A little smaller fissure runs from Nikšić through the Nikšić county to Maganik peaks.

In 1984, special maps of seismic hazards were elaborated. The seismic hazard, expressed by parameters of the maximum expected earthquake intensity and the maximum horizontal ground acceleration, was elaborated for three past time periods: 50, 100, and 200 years, with the probability of an event realisation of 63 %. The hazards parameters were calculated for the level of so-called basic rock, or firm ground.

In compliance with new trends of present project codes, such as "Eurocode 8", it is recommended for map elaboration to use the probability of non-exceeding 10 % in 50 years, or for the period of past 475 years, and consequently it is recommended to harmonize the national code in the project area in conditions of seismic danger.

Apart from the above-mentioned, in connection with natural phenomena accompanying earthquakes, it is important to innovate existing maps of potential landslides and slope movements caused by seismic events. Even more important it is to define the hazards from soil liquefaction occurrence, recorded in many places during the destructible earthquake of 1979.

New data on the seismic hazard in Montenegro have appeared due to the need and as the result of the definition of ore reliable bases of the seismic hazard for past 475 years ("Eurocode 8"), with the realisation probability of 70 %, using the spatial seismic approximation method. The results of the calculation of hazards is expressed in the form of a values of the maximum expected horizontal ground acceleration in conditions of the basic rock.

The seismic hazard with parameters of ground intensity and acceleration on the basic rock, with the realisation probability of 63 %, showed by the previous spatial plan for the Danilovgrad district, for the past 50 years was 7.5 Richter degrees and a(g) = 0.114; for the past 100 years was 8.2 Richter degrees and a(g) = 0.169; and for the past 200 years it was 8.8 Richter degrees and a(g) = 0.252.

The basic values of seismic parameters within the Danilovgrad district area may reach even 9 Richer degrees in quaternary sediments, due to the high level of groundwater in the Bjelopavlićka plain.

The seismic activities, especially those with high intensity, may lead to a number of consequent hazards: liquefaction, ground sinking, ground movements, landslides, changes in the groundwater level.

1.8. POPULATION

1.8.1. Present situation

According to records from 2011, the population of the Danilovgrad district is 17,678 inhabitants, out of which 6,892 live in towns.

Although the Danilovgrad district, economically the most developed part of the central region of Montenegro, belongs to developed centres as Podgorica and Nikšić, it has experienced

D.O.O. VODOVOD I KANALIZACIJA VIK DANILOVGRAD
STRABAG AG

migration of its population from mountainous parts towards Danilovgrad as the district centre, and also towards towns in the flat country – Nikšić and Podgorica. However, it has also experienced a certain influx of inhabitants from less developed northern parts of the country.

The economic situation, conditioned by political situation and transformation of the society, decreased the living standard of the population, which has lead to even more profound demographic changes. A large number of refugees and displaced persons have moved here.

There are 80 settlement within the Danilovgrad district. According to functional, spatial, and demographic characteristics these settlements are divided to three groups:

- Bjelopavlićka plain with settlements at elevation around 200 m, including the towns of Danilovgrad and Spuž, and villages of Begovina, Bileća, Bobulja, Bogićevići, Brajovići, Braćani, Veleta, Viš, Vučica, Gorica, Gornji Martinići, Gradina, Grbe, Gruda, Dabojevići, Daljam, Donje Selo, Donji Martinići, Donji Rsojevići, Župa, Zagorak, Jabuke, Jastreb, Jelenak, Klikovače, Kopito, Kosić, Kujava, Lazarev Krst, Lalevići, Livade, Malenza, Mijokusovići, Novo Selo, Orja Luka, Pitome Loze, Povrhpoljina, Podglavica, Požar, Potkula, Rošca, Sekulići, Sladojevo Kopito, Slap, Strahinići, Tvorilo, Ćurilac, Frutak i Šume, altogether 51 settlements.
- Settlements in hilly areas including places with elevation 200-600 (650) m: Bare Šumanovića, Boronjina, Brijestovo, Vinići, Gornji Rsojevići, Do Pješivački, Drakovići, Đeđezi, Đuričkovići, Zagreda, Jovanovići, Kupinovo, Lubovo, Mandići, Miogost, Mokanje, Mosori, Musterovići, Podvraće, Potočilo, Ržišta, Slatina, Sretnja, Ćurčići i Šobaići, altogether 25 settlements.
- Settlements in mountainous areas with elevation over 600 (650) m: Gostilje Brajovićko, Gostilje Martinićko, Dolovi i Poljica, altogether 4 settlements.

The following table shows the real population size given in the document "First results, Census of Population, Households and Dwellings in Montenegro" prepared by Statistical Office of Montenegro in May 2011:

	Population	Households	Dwellings
Danilovgrad	17,678	5,497	8,208
Urban	6,892	2,069	2,593
Other	10,786	3,428	5,615

1.8.2. Prospective situation

Data on the prospective population size are based on the study "Elaboration of a strategic regional plan for sewerage and wastewaters in the central and northern parts of Montenegro" from 2004, as well as on data from the 2007 study "Regional plan of the Danilovgrad district". These data were analysed for 2007, 2020 and 2030.

VIK VODOVOD I KANALIZACIJA DANILOVGRAD
STRABAG AG

From the above-mentioned documents it may be implied that the population size shall increase in the following period, by 1 % in towns and by 0.5 % in rural areas.

Location	Population 2003 (records)	Average annual rate of population increase	Expected population size		
			2007	2020	2030
Danilovgrad (town)	5,188	1.00 %	5,398	6,144	6,788
Gorica	142	0.50 %	145	155	162
Zagreda	222	0.50 %	226	241	254
Urban areas total	5,552		5,769	6,540	7,204
Rural areas	10,819	0.50 %	11,037	11,776	12,378
Danilovgrad district	16,371		16,806	18,316	19,582

The following table shows the population size given in the study "Elaboration of a strategic regional plan for sewerage and wastewaters in the central and northern parts of Montenegro":

Town / year	2010	2020	2030
Danilovgrad	5,407	5,972	6,597
Gorica	147	154	162
Zagreda	229	241	253
Urban areas total	5,783	6,367	7,012
Rural areas	11,185	11,752	12,353
District total	16,968	18,119	19,365

The following table shows the population size given in the document "Spatial urban plan of the Municipality of Danilovgrad" prepared by CEP-Beograd, MonteCEP-Kotor, Planet Cluster-Madrid (Spain) in 2014:

	2011	2020
Danilovgrad	18,472	21,502
Urban	6,852	8,319
Other	11,620	13,183

D.O.O. VODOVOD I KANALIZACIJA VIK DANILOVGRAD
STRABAG AG

1.9. EXISTING INFRASTRUCTURE CONDITIONS

1.9.1. Potable water supply

The Danilovgrad district is among the best districts in terms of potable water supplied through the public water supply system.

This is mainly thanks to the extensive Danilovgrad, or Bjelopavlićka, water supply system, which includes the whole flat area from Glava Zete in the north to Grbe and Daljam in the south. This system supplies over 30 locations within the district, i.e. 80 % of the district population in total. Further, there are water supply systems constructed jointly with neighbouring districts as well as small village systems.

Water supply for the remaining population in locations without water supply systems (mainly in hilly areas) is provided, or may be provided, only using tanks. On western slopes of the Bjelopavlićka plain there are virtually no sources which could be utilised for the construction of rural water supply systems. Eastern slopes contain some smaller sources (springs) above Martinići and below Ostrog.

The Bjelopavlićka water supply system is fed from seven sources with the minimum capacity of 360 l/s. All these sources are interconnected and form a unified water supply system.

In connection with these data it could be assumed that the capacity of the Bjelopavlićka water supply system is more than sufficient, even when requirements of large consumers (consuming around 55-60 % of water) are included.

However, the situation is not satisfactory in the summer season. Some marginal locations, or some branches of the system, are not regularly supplied with a sufficient quantity of water. Besides technical reasons, such as deficiencies of the existing water supply system, this is due to impermissible water losses caused not only by undesired discharge of water but also by illegal drawing of water through anonymous connections, faulty water meters, etc.

The lack of water is frequently caused also by enormous consumption for watering gardens and orchards, which is non-purposeful use of water.

The water piping is of various age, from 1 year to as many as 115 years, made of various materials in 50-300 mm diameters.

Occasional shorter or longer periods with lack of water, especially in the summer season, are caused also by small capacities of reservoirs (around 2045 m^3).

1.9.2. Rainwater and sewage water collection

The only water supply system constructed in the district (and only partially) serves the town of Danilovgrad. This system has been constructed gradually and inconsistently. First the storm-water sewerage was constructed for collecting waters from some regularly flooded parts of the town and draining them to the Zeta river. Then neighbouring buildings were connected to this system. This practically sanitary (or combined) sewerage currently covers only the town centre.

In other locations of the district, household sewage waters are disposed of through septic tanks and soakways. No relevant data on their pertain are available, but it is assumed that problems may occur in flat areas, especially on the right bank of the Zeta river with loamy ground with low seepage. An advantage of this situation is that all such cases are individual solutions and small households with very efficient use of water.

On the left bank of the river and especially in a permeable zone, septic tanks and soakways function well, as well as in hills around flat areas formed by limestone.

Military structures (barracks) are equipped with their own sewerage system with a WWTP, discharging into the Sušica river.

All current production plants situated along the Zeta river from Pažići to Grbe are equipped with their own sewerage systems. These systems are usually constructed separately for sewage, technological, and storm waters.

Technological wastewaters at "Mermer" contain only inert particles of stony dust. They are discharged directly to the Zeta river, causing local turbidity which shall be eliminated. Further, the issue of sewage water disposal shall be dealt with.

Plants on the left bank of the Zeta river, i.e. Fabrika kreča (lime works), Fabrika stanova (construction of flats), and Ciglana (brick works), are currently out of operation, thus they generate no technological waters, and sewage waters are disposed of in septic tanks.

1.10. PROTECTED AREAS AND PROTECTION ZONES

When elaborating their bids, tenderers are obliged to take into account all risks resulting from the significance of the project area in terms of the protection of the environment and landscape.

1.11. HEALTH PROTECTION AND WORK SAFETY

All works shall be executed strictly in compliance with current legislation of Montenegro.

Works shall be executed under full operation of the sewerage systems. All responsible persons and workers directly participating in the works shall strictly observe all health protection regulations and shall not promote any efforts to simplify work activities if it could present risks to their own or other workers' health. Caring for safety and health protection is an equivalent and integral part of the preparation, planning and execution of work tasks.

Prior to the work commencement, the Contractor is obliged to prepare the "Work safety and health protection plan". The Contractor is obliged to execute all works in compliance with this plan and to observe directions of the Employer's authorised person regarding health protection and work safety.

The Contractor shall pay attention to certain activities related to increased injury risks for Contractor's workers, Employer's workers, and the public. The following activities present serious danger to health, therefore measures for reducing this danger shall be taken:

- Excavation work (sheeting preventing soil sliding, underground work, fencing and enclosures, warning signs for pedestrians).

D.O.O. VODOVOD I KANALIZACIJA VIK DANILOVGRAD
STRABAG AG

- Work at heights (falls, falling materials).
- Enclosed spaces (lack of oxygen, harmful gases/vapours/fumes, explosive gases).
- Work executed on public communications (traffic, pedestrians).
- Lifting heavy loads (suitable equipment, stable base, qualified driver/load binder).
- Works interfering with other Contractor's activities (existing operation and equipment).
- Storing, handling, using hazardous substances (chemical/explosive substances).
- Controlled handling of waste materials.

Prior to the commencement of any risk activity specified above, the Contractor shall submit a Safety/Methodical statement to Engineer for approval and commence with works only after receiving the Engineer's written approval recorded in the building log.

Prior to the work commencement, all workers shall be trained, during the work execution they must be under adequate supervision.

The whole construction site and temporary works must be suitable for the activities performed and shall be thoroughly checked prior to the work commencement by the Contractor (especially by a safety engineer) and Engineer.

After concluding the Contract, the Contractor shall appoint a **Safety engineer** as specified by relevant regulations who shall be responsible for the observation of safety rules during the whole construction. This person must be qualified for the execution of the function and authorised to issue regulations and take actions to prevent work injuries. The engineer's name shall be notified to the Employer's and Engineer prior to the work commencement.

The safety engineer (if there is a group of Contractors, one engineer per each Contractor) shall be responsible for work safety and health protection during the whole construction (if there is a group, according to a written agreement submitted to Engineer regardless the fact whether the main Contractor or subcontractor, contracted within this Contract by the main Contractor) are present on the construction site concerned.

The Contractor's safety engineer shall participate regularly in site meetings at which he shall present information on the results of regular inspection of the site. He shall record this activity in a separate log which shall be part of the Contractor's documentation.

The Contractor shall provide Engineer with detailed written information on every accident without any unnecessary delay. An internal record shall be made about every accident, signed by Engineer and Contractor (safety engineer), and filed to Engineer's documents. Upon the occurrence of any injury, the Contractor shall immediately inform appropriate authorities.

Engineer may ask the Contractor to exclude from the construction site any person employed for the work execution, if this person's behaviour presents hazards to safety and health of other persons or to the environment.

No part of the construction site marked "No unauthorised access" may be entered without "Work permit". Places containing active and functional mechanical-technological,

electrotechnical or chemical equipment, and all operated sewers, manholes, and chambers shall be marked with this instruction. The Contractor may not allow any of his employees or subcontractors to enter such places until they are permitted to do so. Should the Contractor require such permission, he is obliged to inform Engineer seven days in advance. Engineer shall then arrange the permit to be issued by a relevant authority. The Contractor shall keep the permit for the whole time of its validity, before returning it to Engineer. By observing conditions of such a permit the Contractor is not acquitted of his duties resulting from the Contract.

When dealing with injuries, the following relevant measures must be taken:

- First aid provided (dressing material, etc.) by personnel trained to do so.
- Injured person transported to a casualty/emergency ward of the nearest hospital.
- Relevant authorities notified as required (police, fire department).

The Contractor shall provide necessary monitoring equipment required for accessing areas with hazardous or potentially hazardous environment. The Contractor shall execute monitoring of all environments with hazardous or potentially hazardous atmosphere and keep records of the monitoring.

The Contractor shall provide necessary equipment for rescue works; this equipment shall be regularly checked and maintained. Records on the equipment controls must be kept on the construction site. The Contractor shall ensure that a sufficient number of his employees are fully trained for the use of breathing apparatuses and for rescue procedures.

Personal protective equipment must be available, as specified in valid regulations, which shall be used if necessary:

- Protective helmets
- Protective goggles
- Ear protectors
- Protective gloves
- Protective footwear
- Reflective jackets

Adequate sanitary facilities shall be available, containing at least:

- Potable water
- Toilets
- Sinks with hot water, soap and towels
- Clean/dry/warm space equipped with table and chairs suitable for eating

1.11.1. Working hours

Working hours shall be determined in compliance with valid legislation and annex to the tender bid. During public holidays or bank holidays work may be executed only exceptionally

D.O.O. VODOVOD I KANALIZACIJA DANILOVGRAD VIK
STRABAG AG

and only with the written approval of Engineer and other potentially concerned parties. The Engineer's approval is not required for situations related to saving lives or property, or to securing works; in these cases the Contractor shall only send a note to Engineer.

Should the working hours be extended in any way due to any reason, no salary shall be paid for the extended time. The Contractor shall observe all relevant provisions of Labour Code and ensure that all specified control activities are executed properly as during normal working hours.

1.12. CHARGES FOR DISCHARGING WASTEWATERS TO SURFACE WATER

Charges for discharging wastewaters to surface water from the existing sewerage during the construction in amounts exceeding the quantity specified in the decision shall be paid by the Employer.

The other charges for discharging wastewaters to surface water during the construction (lowering the ground water levels within the construction site) shall be paid for by the Contractor.

1.13. OFFICE SPACE

From the day when execution of this Contract is commenced, to the day when the Contract with the Contractor is concluded, and from the day when the trial operation is completed, to the day when the execution of the Contract is completed, the Engineer shall be provided with a furnished office (min. 15 m2) for his disposal upon retribution with the Contractor agreed upon with the Employer (including expenses on electric power, heating and cleaning, water and sewage charges). **The office shall be provided by the Employer.** The retribution shall not include expenses on printing and copying and telecommunication fees (local and international). From the day of the construction work commencement to the day of the trial operation completion, the Contractor shall be responsible for securing the Engineer's office.

1.13.1. General equipment to be provided by the Contractor during the construction period

The Contractor shall provide, maintain, store on the construction site, and make available for the Engineer representatives advanced measuring devices intended for the control of executed construction works.

No.	Device name	Quantity
1	Notebook - 17" 1920 x 1080 (Full HD), Intel Core i7, 8GB RAM, HDD 1TB, AMD Radeon HD 8870M (2GB), 4x USB 3.0, DVD±RW, wireless laser mouse, OS Windows Professional, MS Office	1 pc
	+ 15" Notebook	1 pc
2	Desktop PC - Intel Core i7, 8GB RAM, HDD 1TB, AMD Radeon HD7870 2MB, USB 3.0, DVD±R/RW/DL, keyboard, laser mouse, OS Windows Professional, MS	1 pc

No.	Device name	Quantity
	Office, LED IPS 24" 1920 x 1200 (WUXGA) pivot.	
3	Laser monochrome printer A3, multifunctional (printer / scanner / copier), 128MB, 600x600dpi, at least 20 pages/min. both colour and monochrome.	1 pc
4	Ink colour printer A3+, multifunctional (printer / scanner / copier), at least 256MB, scanner 1200dpi, at least 15monochrome/8colour pages/min.	1 pc
5	Cabinet for drawings	As required
6	Automatic levelling instruments, staff 5 m long	As required
7	Spirit level 1 m long	As required
8	100m laminate tape measure (open rewind spool)	1 pc
9	30m steel tape measure (open rewind spool)	1 pc
10	Sectioned layout pole, 2 m long	As required
11	5 m pocket steel tape measure	2 pcs
12	Digital multimeter (ammeter+voltmeter+ohmmeter)	1 pc
13	Both-handed strike hammer and bowed hammer	As required
14	Sheet-metal board wipeable	As required
15	Markers for writing on the board	As required
16	Line marker	As required
17	Book for recording measurements	As required
18	Dynamic panel 300 mm	As required
19	Hammer for measuring concrete hardness	As required
20	Contact thermometer for concrete	As required
21	Plastic device for measuring concrete consistency	As required
22	Water gauge	As required
23	Plumb bob	As required
24	Watertight lamp incl. batteries as required	As required
25	Thermometer (maximum/minimum)	As required
26	Hard hats	4 pcs
27	Pair of rubber boots	4 pcs
28	Safety vest	4 pcs

The Contractor shall provide an adequate number of workers to perform cleaning and basic maintenance of tools and to assist Engineer at measuring, controlling, testing or proving works executed by the Contractor.

After the handover, a report shall be elaborated with a detailed list of equipment, signed by the Contractor, Engineer and the Employer.

1.13.2. Computer equipment

The Engineer shall operate at his own expenses and be responsible for all computer, communication and office technology.

1.14. CONSTRUCTION SITE

1.14.1. Construction site characteristics

The construction site shall be defined by the construction perimeter formed by the working belt for cut-and-fill sewers, i.e. 6-12 m. In confined conditions it shall be defined by the road width, if the sewerage route extends to bushes and trees the width shall be 6 m. In local roads the working belt shall, depending on the location of sewer routes, extend across half of the roadway, or the whole roadway. In main roads it shall extend across half of the roadway.

Underground and surface utility lines are located in the sewer route. When structures are realised, both existing and planned utility lines and structures shall be taken into account regarding their protection zones and work performed within these zones.

Besides the protection zones of utility lines, other protection zones of infrastructure (roads, water courses, etc.) are located within the area of the construction concerned.

1.14.1.1. Capacity and use of newly designed temporary-work structures

The perimeter of the line part site includes construction areas serving as temporary-work areas, material storage sites, excavated soil temporary dumping sites, and access areas. Temporary-work structures, offices, and technological and construction material storage areas shall be situated within the construction yard occupying an integrated area.

Areas for temporary land occupation, utilised as temporary dumping sites of excavated soil and backfilling material, shall be determined during the site handover.

The temporary works shall further include structures serving as changing rooms, sanitary facilities, site engineer's and foremen's offices, storerooms, Engineer's office, and meeting room. Steel storage structures serving as storerooms of tools and materials shall be located separately within the site.

1.14.1.2. Providing access, water and power supply to temporary works

The construction site shall be accessible from communications.

Supply of potable water to be used for the preparation of concrete mix shall be provided before the construction commencement. The water connection point shall be specified upon discussion with the operator on contractual conditions regarding the connection.

Prior to the construction commencement it is necessary to apply for the establishment of a point for a temporary power connection.

1.14.1.3. Land occupation

Both permanent and temporary land occupation shall occur. Permanent occupation shall apply mainly to pumping stations.

Temporary occupation shall apply mainly to:

- Work belt 3, 6, 12, 15 m wide.
- Material storage sites, temporary soil dumping sites, areas for the construction and for temporary works.

Individual storage sites shall be arranged by the Contractor and specified with the town and appropriate environmental department representatives prior to the construction work commencement.

Excavations located outside main roads and within local roads are designed to be performed during the construction, if possible. Some sections may be closed. Traffic marking must be provided to control the traffic during the construction.

1.14.1.4. Sewage disposal during the construction of the reconstruction

During the construction of a sewer section, the section or manhole in question must be shut down for sewage discharge; sewage bypass or pumping must be provided by the Contractor. Further, interrupted sewer connections must be reconnected.

If a foundation pit is overflowing or get flooded with rainwater, the rainwater must be pumped with an auxiliary sludge pump.

1.14.2. Construction process

The Contractor shall propose a detailed and particular construction process schedule (individual stages), with respect to the specified completion deadline.

Regarding the scope of the construction to be realised, it shall be divided into several stages. The construction shall be realised gradually from zone 1 to zone 7 (part of zone 7 shall be realised before zone ~~2~~ 4). Current sewerage discharge into the recipient shall be finished and discharge to the WWTP shall be reconnected only after the WWTP has been constructed. New sewage producers shall be connected to the sewer system only after the discharge has been connected to the WWTP.

The construction shall be realised in sections, always up the piping, from the lowest point (pumping stations, connection to the existing sewerage system, etc.) to the highest point. Pumping stations (PS's) located within the system may serve as the main points for the construction planning.

D.O.O. VODOVOD I KANALIZACIJA VIK DANILOVGRAD
STRABAG AG

Seasonal effects and the volume of the Employer's financial means shall be taken into account within the time schedule.

1.14.3. Archaeological sites

Tenderers are obliged to take into account all risks resulting from the archaeological significance of the project area.

1.15. LIST OF REGULATIONS

1.15.1. General

During the Contract execution, the Contractor shall observe all laws, decrees, regulations, and technical standards valid in Montenegro.

If specific standards or regulations are referred to in the Contract, provisions of the latest valid issue or revision of relevant standards or regulations must be applied. If new regulations come into effect during the Contract execution, or if laws and standards are amended, permitting less strict criteria and contractual terms, the Contractor must meet the original specifications.

1.15.2. Indicative list of regulations

- Zakon o vodama, ("Sl. list RCG", br. 27/07 od 17.05.2007, 73/10 od 10.12.2010, 32/11 od 01.07.2011, 47/11 od 23.09.2011, 48/15, 52/16, 55/16 i 2/17) - *[Water Law]*
- Zakon o lokalnoj samoupravi ("Sl. list RCG", br. 42/03 od 16.07.2003, 28/04 od 29.04.2004, 75/05 od 12.12.2005, 13/06 od 03.03.2006, 88/09 od 31.12.2009, 03/10 od 19.01.2010, 73/10 od 10.12.2010, 38/12 od 19.07.2012, 10/14, 57/14 i 3/2016) – *[Law on Local Self-Government]*
- Zakon o komunalnim djelatnostima ("Službeni list CG" br.12/95 i 74/16) – *[Law on Communal Activities]*
- Zakon o uređenju prostora i izgradnji objekata, "Sl. list Crne Gore", br. 51/08 od 22.08.2008, 40/10 od 22.07.2010, 34/11 od 12.07.2011, 40/11 od 08.08.2011, 47/11 od 23.09.2011, 35/13 od 23.07.2013, 39/13 od 07.08.2013, 33/14 od 25.jula 2014.god.) – *[Law on Spatial Planning and Construction of Structures]*
- Zakon o javnim nabavkama, ("Služber list CG", br. 46/06 od 21.07.2006. br. 42/11 od 15.08.2011, 57/14 i 28/15) – *[Law on Public Procurement]*
- Zakon o zaštiti prirode ("Sl. list Crne Gore", br. 51/08 od 22.08.2008, 21/09 od 20.03.2009, 40/11 od 08.08.2011, 6/14) – *[Environment Law]*
- Zakon o životnoj sredini ("Sl. list Crne Gore", br. 48/08 od 11.08.2008, 40/10 od 22.07.2010, 40/11 od 08.08.2011, 52/16) – *[Environment Law]*
- Zakon o procjeni uticaja na životnu sredinu, ("Sl. list RCG", br. 80/05 od 28.12.2005, "Sl. list Crne Gore", br. 40/10 od 22.07.2010, 73/10 od 10.12.2010, 40/11 od 08.08.2011, 27/13 od 11.06.2013, 52/16) – *[Law on Environmental Impact Assessment]*

D.O.O. VODOVOD I KANALIZACIJA DANILOVGRAD VIK
STRABAG AG

- Uredba o klasifikaciji i kategorizaciji površinskih i podzemnih voda, ("Sl. list Crne Gore", br. 02/07 od 29.10.2007) – *[Decree on the classification and categorization of surface and underground waters]*
- Uredba o projektima za koje se vrši procjena uticaja na životnu sredinu ("Sl. list RCG", br. 20/07 od 04.04.2007, 47/13 i 53/14) – *[Decree on the projects for which the assessment is made of the impact on the environment]*
- Pravilnik o bližim uslovima koje treba da ispunjava komunalni kanalizacioni mulj, kolicine, obim, učestalost i metode analize komunalnog kanalizacionog mulja za dozvoljene namjene i uslovima koje treba da ispunjava zemljište planirano za njegovu primjenu ("Službeni list Crne Gore", br. 89/09 od 31. decembra 2009. godine) – *[Guidelines on further requirements to be satisfied for sludge in waste water sewage system, the quantity, volume, frequency and methods of analysis of the sludge in the municipal sewage system for approved purposes and on requirements for the soil planned for its use]*
- Pravilnik o kvalitetu i sanitarno-tehničkim uslovima za ispustanje otpadnih voda u recipijent i javnu kanalizaciju, nacinu i postupku ispitivanja kvaliteta opstadnih voda, minimalnom braju ispitivanja I sadržaju izvještaja o utvrđenom kvalitetu otpadnih voda. ("Sl. list Crne Gore", br. 45/08 od 31.07.2008, 09/10 od 19.02.2010, 26/12 od 24.05.2012, 52/12 od 12.10.2012, 59/13) – *[Guidelines on the quality and sanitary and technical conditions for discharge of waste water to reception tanks and public sewage system, on the method and procedure for the examination of waste water quality, on minimal number of reports on determining the quality of waste water]*
- Pravilnik o načinu izrade, razmjeri i bližoj sadržini tehničke dokumentacije ("Sl.list CG", br.23/14,32/15 i 75/15) itd.) – *[Guidelines on the method of creation, the scope and the closer content of the technical documentation]*
- Zakon o državnom premjeru i katastru nepokretnosti ("Sl.list CG", br. 29/07, 73/10, 32/11, 40/11, 43/15) – *[Law on State Survey and Real Estate Cadastre]*
- Zakon o PDVu (Zakon o porezu na dodatu vrijednosti Sl. list RCG" No. 65/01, 12/02, 38/02, 72/02, 21/03 and 76/05, 4/06, and "Sl. list CG", No. 16/07, 73/10, 40/11, 29/13, 9/15, 53/16 and 1/17) - [Law on VAT]
- Rulebook on the manner of development and control of technical documentation for the execution of geodetic works, acquiring authorization for planing and execution of geodetic works, ledger of works and inspection book, operating license and identity card for carrying out geodetic works.

The Contractor shall be informed about all eventually new amendments of above list of legislative regulation and possibly related laws.

2. STANDARD OF MATERIALS, WORKMANSHIP AND EQUIPMENT REQUIRED

2.1. GENERAL REQUIREMENTS – CIVIL PART

2.1.1. General requirements on civil and building works of the construction

2.1.1.1. Introduction

General requirements specified in this section form a part of the Contract for Work and requirements on the design documentation as well as structural design of the Work. The general requirements are completed with the Employer's requirements on civil and building, mechanical and electrical works. Should provisions be missing in the Employer's requirements, provisions given in the general requirements are applicable. Should a conflict between general requirements provisions and provision of the Employer's requirements occur, provisions given in the Employer's requirements are applicable.

2.1.1.2. EngineerRegulatory requirements

General requirements laid down by relevant legal regulations are applicable for the establishment and operation of construction sites and must be respected by participating parties.

Relevant legal regulations require a construction site to be secured against unauthorised access in places where hazards to human health or life may occur, to be marked including necessary information on the construction and participating parties, to be equipped with an entrance from a communication for delivery of construction products, disposal of soil and constructional refuse and for access of medical and fire vehicles.

Relevant legal regulations require access roads for material supply to be constructed and equipped, so that construction activities could be executed properly and safely. Further, the surrounding area shall not be excessively affected, especially by dust, noise, hazards to safety of traffic on communications, pollution of communications, air and waters, limited access to adjacent buildings and plots, to utility lines or fire-protection equipment.

Public areas and communications may be utilised for the construction site only within specified scope and time necessary.

2.1.1.3. Protection of historical monuments

The current legal protection of historical building monuments is ensured by relevant legal regulations.

Should a higher concentration of historically valuable structures or archaeological findings occur, they may be protected as a whole and their protection zone may be declared.

Within the performance of construction activities it is necessary to respect a competent authority's binding opinion, usually specified in the building permit. This authority may require that all archaeological items found are reported, or an archaeological survey is performed in

the form of an expert monitoring or soil exposure in the course of excavation works, followed by the preservation and documentation of archaeological layouts and findings along the construction in locations concerned. The survey may be performed only by authorities and organisations authorised to do so. Further conditions and requirements of the relevant authority which the Contractor must respect and meet, shall be specified in the authority's opinion in the building permit.

The Contractor is assumed to have studied the requirements specified in the building permit and have included in the tender dossier a sum for covering costs of the archaeological survey within the construction site as required by the building permit.

2.1.1.4. Requirements on standards, construction materials and products

The Contractor's design documentation, including eventual changes, shall be elaborated within the meaning of the latest standards valid in Montenegro, either EN or ISO. The standard determining stricter requirements shall be considered binding.

All construction products and works shall comply with specifications of the latest technical standards issued in Montenegro, European standards (EN) or ISO standards. The standard determining stricter requirements shall be considered binding.

Requirements on construction products shall comply with Directive 89/106/EEC, on construction products. Only suitable construction products complying with relevant legal regulations may be used. The process of compliance verification is specified in relevant legal regulations.

Prior to incorporating materials and equipment into the Work, the Contractor is obliged to submit certificates for all materials and equipment to Engineer to be approved in compliance with the contract. The certificates shall be issued by an accredited testing institute and valid until the date of the project completion.

2.1.1.5. Establishing the site in historical reserves

The current legal protection of historical building monuments is ensured by relevant legal regulations.

Should a higher concentration of historically valuable structures or archaeological findings occur, they may be protected as a whole and their protection zone may be declared.

Within the performance of construction activities it is necessary to respect a competent authority's binding opinion, usually specified in the building permit. This authority may require, in reasoned cases, that an archaeological survey is performed in the form of an expert monitoring or soil exposure in the course of excavation works, followed by the preservation and documentation of archaeological layouts and findings along the construction in locations concerned. The archaeological survey may be performed only by authorities and organisations authorised to do so.

D.O.O. VODOVOD I KANALIZACIJA DANILOVGRAD
STRABAG AG

2.1.2. Protection of the environment

2.1.2.1. General

General requirements on the protection of the environment are specified in relevant legal regulations.

In the course of performing construction activities, all regulations regarding the protection of the environment shall be respected in the maximum extent.

The tenderers are obliged to get acquainted with all requirements and limitations resulting from opinions of relevant state environmental authorities and include them in the tender price.

The Contractor shall take all measures necessary for meeting all specified regulations and rules regarding the protection of the environment. No contamination shall be accepted within the construction site or work space. All necessary safety measures for the prevention of such contamination shall be taken and their observation shall be required with no exceptions.

The Contractor shall use technological constructional procedures ensuring a necessary guarantee of the prevention of environmental impact of excessive noise, dust, vibrations, etc. on workers, local inhabitants and so on. Preventive measures shall be taken also along transport routes.

When purchasing materials, the Contractor shall take into account not only their price and quality, but also their effects on the environment during their production process.

The Contractor is obliged to reduce harmful effects of constructional activities and their impact on the environment during the construction. These include especially noise, pollution of air, water and communications, and vegetation protection.

No hazardous substances may be supplied to or used for any purpose within the construction site, unless the Contractor has received a written approval from the construction Engineer in advance and disposes of necessary authorisation. The position of every storeroom of hazardous substances within the construction site must be approved of in writing by Engineer.

When handling hazardous substances, the Contractor shall take all measures in compliance with valid legal regulations, and shall meet all obligations resulting from valid legal regulations.

2.1.2.2. Water protection

Construction activities may not cause any contamination of ground waters (surface and ground waters affected by construction materials or activities). During the construction, contamination of soil by oil products and other polluting substances must be prevented.

Generally, legal regulations regarding waters shall be observed.

Unless it is contrary to valid legislation, constructed facilities located within the inundation zone must be situated in such a way as to be protected against a hundred-year flood. This applies especially to openings of sewer and water shafts, valve chambers, pumping stations, and other facilities which, if flooded, may cause water contamination.

D.O.O. VODOVOD I KANALIZACIJA VIK DANILOVGRAD
STRABAG AG

Regarding the water protection, it is exceptionally important to plan a backup power supply for all pumping stations which have no storage capacity dimensioned within the meaning of valid regulations.

The Contractor shall be responsible for water protection according to local regulations.

2.1.2.3. Air protection

Air protection is ensured by relevant legal regulations.

The design documentation (DD) must be approved of by an environmental protection authority. The Contractor is obliged to meet all conditions specified in the opinion mentioned. Should any changed by made in the DD, especially those regarding contamination sources, the changed DD must be approved again by the relevant authority.

Unless it is contrary to valid legislation, the application for construction approval must include verification that the best available technical equipment has been selected, justification of the most suitable solution in terms of air protection, an authorised person's expertise focusing on the determination of source classification (new - existing), a list of necessary technical measures ensuring the reduction of emissions – odour substances, surrounding environment impact.

2.1.2.4. Waste disposal

All waste must be disposed of in compliance with provisions of legal regulations.

The waste register shall be kept in compliance with relevant legal regulations. The Contractor shall be responsible for the waste classification and collection. Individual types of waste shall be collected separately in appropriate places or collecting equipment, and removed and disposed of by authorised personnel.

The Contractor is obliged to recycle all usable waste (e.g. crushed asphalt and concrete from roads and other structures); only other excessive material (waste) shall be placed outside the construction site in official landfills, in compliance with valid legislation.

The Contractor shall select a landfill at his consideration. The bid for the collection and storage of soil/debris within individual structures shall be fixed and may not be changed depending on the distance of the landfill from the construction site.

Unless it is contrary to valid legislation, if the total quantity of construction waste and demolition waste exceeds 200 tons per year, its holder is obliged to separate it according to the types and provide its reuse. If more than 100 kg of hazardous waste per year is generated during the construction realisation, its holder is obliged to ensure a permission from a relevant state authority regarding waste management. If more than 100 tons of other waste per year or 500 kg of hazardous waste is generated by the construction operation, its holder is obliged to submit to the relevant state authority his waste management program for approval.

D.O.O. VODOVOD I KANALIZACIJA VIK DANILOVGRAD
STRABAG AG

Before the certificate of completion is issued, documents containing quantities of generated waste and a legal method of its reuse/disposal must be submitted to the relevant state authority.

Landfilling fees are specified in relevant legal regulations.

The tenderer shall arrange controlled landfills for storing excessive soil, debris and other waste.

Should the sludge or bottom sediments be handled, the Contractor shall observe relevant legal regulations specifying details of the project content and details of the confirmation procedure for dosing and application of sludge and bottom sediments in agricultural or forest land.

2.1.2.5. Protection against noise, vibrations and emissions

Due to the environmental protection, the Contractor shall:

- Prevent the generation of excessive dustiness during demolition works, e.g. by watering dusty places within the space fit for demolition, or creating a water curtain.
- Ensure cleaning of vehicle tyres, or chassis of other construction machinery before their exiting the construction site, and sprinkling and cleaning public communications within the site exit. Engineer is authorised to make a decision on the technology used.
- Use suitable vehicles for the transport of loose materials. Cover loose material storages with sheets/foils.
- Observe hygienic rules regarding the protection of health against adverse effects of noise and vibrations during the construction realisation. Ensure such equipment for the realisation that shall not exceed the noise level of during its operation close to residential parts of individual municipalities.
- Use machinery in good conditions for the construction, equipped with specified noise reducing covers.
- Perform regular technical inspections and maintenance of machinery and devices.
- Ensure continual operation of machinery, a sufficient number of transport vehicles. Turn off machinery engines during necessary breaks.
- Prevent operation of transport vehicles and machinery producing excessive amounts of harmful emissions in exhaust fumes.
- Maximally reduce dustiness during construction and other works and transport.
- Secure transported materials to protect transport routes against contamination (sheets, watering, sped limitation, etc.).
- Construct paved (dustless) and drained access roads.
- Restrict operation and parking of vehicles outside paved surfaces.

V.O.D. VODOVOD I KANALIZACIJA VIK DANILOVGRAD
STRABAG AG

- Ensure cleaning of tyres (chassis) of transport vehicles and machinery entering public communications.
- Remove immediately unavoidable contamination of communications.
- Maintain tidiness on the construction site.
- Store construction materials as required in designated places.
- Draining rainwater from the construction site.
- Prevent water contamination (with oil products, mud, car cleaning agents, etc.).
- Use areas adjoining the site for the construction.
- Maximally protect vegetation in the vicinity of the construction site.

2.1.2.6. Clearing grown vegetation and replacement planting

In spite of the designer's effort to minimise clearing grown vegetation, for the construction realisation it will be necessary to clear some vegetation in the place of several structural units. Unless it is contrary to valid legislation, the working belt width shall be minimised through vegetation to 5.5-6.5 m. Along the working belt edges, trees with trunk circumference over 100 cm shall be protected against damage up to 130 m above the ground. Special attention shall be paid to dispersed protected trees and other significant vegetation within municipalities concerned (especially around churches, graveyards and similar places).

Sufficiently in advance of the construction work commencement, vegetation passportisation and inventory within the site shall be completed. If trees growing separately from a forest are necessary to be cut down, permission from relevant municipalities or other owners/caretakers must be obtained. Existing vegetation shall be cleared in compliance with valid Montenegro legislation. Vegetation clearing shall be performed out of the growing season.

Cleared vegetation shall be replaced with new planting of original types.

2.1.2.7. Environmental protection plan

The Contractor must elaborate and submit to Engineer for approval an environmental protection plan during the construction in compliance with valid legal regulations of Montenegro and the above-listed requirements. This plan must include the following issues and contain proposals for the elimination or reduction of contamination sources and procedures in emergency situations:

- Hygienic facilities for construction personnel on the construction site;
- Disposal of excessive material from excavations;
- Contamination of soil, ground and surface waters with oil, contaminated service water, construction materials and chemicals;
- Contamination of air with exhaust fumes from construction machinery due to construction works;
- Surface water discharge from the site drainage systems to surface waters;

D.O.O. VODOVOD I KANALIZACIJA ViK DANILOVGRAD
STRABAG AG

- Noise and vibrations on the site and its surrounding;
- Keeping the site tidy.

2.1.3. Work safety requirements

2.1.3.1. Work safety on the site

All works must be executed strictly in compliance with valid Montenegro legislation.

The work safety on the site shall be governed by relevant legal regulations determining requirements on the provision of safety of work and technical equipment in the course of constructional, assembly, and maintenance activities, production of construction materials, their storage and handling, and work related to the construction activity.

The work safety on the site shall also be governed by relevant legal regulations determining requirements on the provision of occupational safety and health protection and technical equipment safety.

The relevant legal regulations further specify responsibilities related to handing-over the site and preparation of structures, and to performing work under exceptional circumstances. The legal regulations further specify the Contractor's responsibility to train employees in compliance with safety regulations, and ensure testing their knowledge, unless specified otherwise. Records on the training must be kept.

Construction works requiring special qualification may be executed only by workers with such qualification. The Contractor must not assign persons to perform construction work if they do not meet requirements related to health conditions and qualification as specified in relevant regulations.

Safety requirements on particular construction activities are specified in relevant legal regulations.

Special attention shall be paid to assembly works, works in hazardous environments and spaces, works at height, on roofs and scaffoldings, demolition works, which are especially dangerous in terms of occupational safety.

Requirements on fire safety are specified in relevant legal regulations, determining technical requirements on fire safety during the construction and usage of structures.

Relevant legal regulation must be observed when working with machinery and vibration devices, handling loads, and working in explosive environments.

Requirements on the provision of fire-fighting water for the site are specified in relevant legal regulations.

Further, legal regulations determining the conditions for providing personal protective equipment must be observed. The Contractor is obliged to provide his employees with adequate protective equipment according to the work executed. Unless it is contrary to valid

legislation, the minimum requirements include protective helmets (easy-to-see for work executed on roads, e.g. of yellow colour or with a reflective band), protective jackets (of yellow/orange colour or with a reflective band for work executed on roads), protective gloves, goggles, ear protectors, working footwear with metal front part, etc.

The minimum safety and health requirements for using working devices are specified in relevant legal regulations.

2.1.3.2. Machines and machinery equipments

Only machines and machinery equipment complying with their design, construction and technical conditions to all work safety regulations may be used. Machinery may be used only for purposes for which it was manufactured and intended.

The use of machines and machinery equipment must comply with instructions for use and maintenance which must always be, together with the operation log, kept in a specified place.

Unless it is contrary to valid legislation, machines and equipment may be operated only by qualified persons of 18 years and older. Machine and equipment operators must be retrained and tested at least once every two years in relation to work safety regulations. Each machine shall be operated only by 1 person, unless specified otherwise.

Machines may be put into operation only by properly rained and tested personnel. Prior to putting them into operation, each machine or equipment must be checked whether it is in good conditions, provided with relevant operational documents, evidence number, and other particulars specified in relevant regulations.

Operators are obliged to inform their supervisors on every defect or deviation of their machine from common operational conditions and record such defects or deviations to the log. Alternating operator must also be informed.

After the Work termination, machines shall be put to safe positions and secured suitably against spontaneous movement. Working tools may be replaced and machines repaired only after turning them off and securing against movement. Machines may be transported, loaded, and unloaded according to directions given in the instruction for use.

2.1.3.3. Construction site organisation

Construction site organisation in terms of work safety and health protection shall be governed by relevant legal regulations.

Unless it is contrary to valid legislation, the site shall be properly fenced off after its limits have been determined. The minimum fence height shall be 1.8 m in built-up areas. Cut and fill structures and structures in which temporary works are executed shall be enclosed with double-bar fencing 1.1 m high or in other way approved by Engineer. The fencing face reaching to public communications must be fitted with a red warning light during limited visibility conditions and at night; red light shall be installed every 50 m along the fence. Sites located outside built-up areas must be fenced-off or enclosed only if they are situated less

than 30 m from public communications. Fencing-off is not necessary, if another suitable method has been arranged with owners or users of the plots concerned.

Works on communications may be executed only upon an approved traffic organisation project and with traffic marking provided.

If the building plot reaches into a protection zone, conditions and requirements determined by specific regulations for the protection zone in question must be observed. If the building plot reaches into overlaying protection zones, the construction must meet conditions of all such zones.

Vegetation located outside built-up areas of the building plot must be saved and protected against damage, with the exception of cases specified in particular regulations.

The location of the Contractor's offices, temporary works, workshops and storerooms shall be approved by Engineer. The Contractor shall provide fencing of his own areas including a lockable gate, and security guarding at his own expenses.

The Contractor is further obliged to insure properly all temporary works and materials stored within the site and submit the insurance contract to Engineer before the work commencement.

2.1.3.4. Fire safety of structures

One of the qualitative aspects of structures is their ability to resist increased temperature and effects of fire. Fire-resistance of the Work is determined by the properties of materials used. The use of products within the construction is defined by relevant legal regulations on construction products. A construction product is suitable for using in terms of fire safety if it enables to maintain bearing capacity and stability for the time determined by technical specifications, to prevent fire and smoke from spreading inside the structure and to its other parts and adjacent structures, to allow people and animals to escape from the structure or to be saved in another way.

The fire-safety of a structure shall be governed, apart from the above-given generally binding regulations, by relevant legal regulations specifying technical requirements on fire safety during construction and usage of structures.

2.1.3.5. Traffic organisation

In places where, due to work executed, it is necessary to close temporarily a section of an existing communication or pavement, or limit the traffic, the Contractor shall provide and maintain a diversion of the section in question.

The above-given work shall be executed in compliance with valid regulations. Traffic signs (type, design) shall comply with relevant legal regulations.

The Contractor shall provide and maintain the traffic signs at his own expenses.

The Contractor further bears responsibility for maintaining all hard surfaces clean. No excessive or other materials may be stored on communications. Unless it is contrary to valid legislation, all entrances to the building and vehicle entries to the plot shall be bridged over

D.O.O. VODOVOD I KANALIZACIJA VIK DANILOVGRAD
STRABAG AG

with metal plates with the min. thickness of 25 mm and sufficient bearing capacity during excavation works. At least one pavement shall be kept free at all times.

2.1.4. Handing-over/acceptance of the construction site

The Employer shall hand over the construction site to the Contractor in compliance with contract terms and with approved work schedule. In the course of the cite handing-over, the Employer shall submit existing geodetic elaborates of individual structures that are available in the land cadastre which the Contractor may, but does not need to utilise. Utility lines and other obstacles, construction perimeter (or working strip for cut-and-fill structures) shall be marked out by the Contractor upon the documentation elaborated by him.

Handing-over of parts of the site, owned by Employer, shall be recorded in the form of a notion signed by the Employer, Contractor and Engineer. Parts of the construction site which are owned by third parties shall be handed over by such a party to the Contractor in the presence of Engineer.

The Contractor is fully responsible for all activities related to the provision of conditions for entering the plots. The Contractor shall visit all owners of the plots on which the works are to be performed in order to discuss the construction realisation, to approve the schedule, access and entry, manipulation belts, temporary and permanent fencing, restoring, and to prepare a summary on the conditions of individual plots. Agreements with owners prepared by the Contractor shall be submitted to Engineer when requested. Should structures stay permanently on these plots after the construction termination (e.g. shafts), the Contractor is obliged to conclude lease contracts with the plot owners in compliance with valid regulations.

Topsoil of agricultural land shall be removed within the width of the working belt and placed along the belt. This soil shall be reused, re-cultivated (stones removed) and seeded with grass.

The working belt width and entry conditions on private plots shall be negotiated by the Contractor with owners/users of such plots.

2.1.4.1. Layout works

The Contractor is fully responsible for layout works.

Unless specified otherwise, all elevation figures shall be given in metres in the valid system written with three decimal positions. data for all elevation figures shall be based on the basic (referential) bench marks submitted by the Employer or determined by the Contractor in the presence of Engineer, in the valid system.

If requested, the Contractor shall submit, prior to the work commencement, a geodetic elaborate in both printed and electronic forms. Accuracy of these bench marks of this geodetic elaborate is the responsibility of the Employer; Engineer may, but does not need to check them, but the Contractor is obliged to verify their accuracy before processing and using them. This proceedings shall be recorded in the form of a notion signed by both

geodesists. During the construction realisation, the Contractor shall determine necessary derived bench marks and shall regularly check them.

The Contractor shall determine suitable places within the site for temporary laying-out points and measuring posts, and in the course of the works shall regularly check the levels of the marking out points and coordinates in the posts, compared to the basic referential points received from the Employer.

The Contractor is obliged to lay out all parts of the Work by their connection to existing parts of the Work. Building structures shall be laid out using steel stakes anchored in concrete, or by another method approved by Engineer.

Unless it is contrary to valid legislation, the Contractor shall establish referential coordinate points during the construction, in distances not bigger than 500 m along all piping. These points shall be marked visibly and placed in approved spots, either in existing structures or in the form of steel stakes anchored in concrete.

For performing the survey works in compliance with the contract requirements, the Contractor shall employ only physical or legal persons authorised to perform geodetic and cartographic activities according to legal regulations who shall be approved by Engineer prior to the geodetic work commencement.

Measuring apparatuses used by the Contractor shall be up-to-date and suitable for the work to be executed, and maintained in acceptable technical conditions. Apparatuses and equipment shall be approved by Engineer prior to the geodetic work commencement.

The Contractor shall submit valid calibration/manufacture certificates issued by authorised bodies for all apparatuses used in the construction. Further calibration shall be performed as required by valid legislation.

All field logs, calculations, maps, etc., of the above-listed laying-out activities shall be submitted to Engineer for approval immediately after the laying-out work termination.

The Contractor shall record and keep all bench marks (both basic and derived) in digital photographs which shall submit to the Employer on a CD-ROM after the contract termination.

Positions and dimensions (or depths) of utility lines marked in the tender documents submitted by the Employer must be regarded as informative. The Contractor must be aware of the fact that not all underground lines are marked in the tender documents (due to insufficient source materials). Thus the Contractor is obliged to make test pits and determine the position of all utility lines prior to the excavation work commencement. Prior to the work commencement, the Contractor is obliged to contact owners/operators of all utility lines found and request accurate laying-out of their positions. The depth may be determined only after the excavation works commencement. During the work performance, the Contractor is obliged to observe all requirements of the utility lines owners/operators during the work.

D.O.O. VODOVOD I KANALIZACIJA ViK DANILOVGRAD
STRABAG AG

2.1.5. Demolition works

2.1.5.1. General

Demolition of any existing building or structure shall not be performed before it is approved by Engineer in writing.

In the case of complete demolition, it shall be performed including foundations, unless specified otherwise in the Employer's requirements or ordered by Engineer. Demolition works must comply with relevant legislation.

Prior to the demolition works execution, machines and machinery equipment must be disassembled. Disassembly works generally include disassembling machines and equipment including piping, wiring, manifolds; discharging old service liquids, and interplant transport according to the Employer's requirements.

The Contractor shall ensure ecological disposal of all disassembled machines and equipment. Disassembly of any equipment shall not be performed before it is approved by Engineer in writing. Should the Employer not agree with the disposal of any machine or machinery equipment, this shall stay the Employer' property and the Contractor is obliged to store such disassembled machine in a determined place. The Contractor is responsible for the disposal of all old discharged service liquids. The disposal costs shall be included in the tender price.

2.1.5.2. Permission for demolition works

Prior to the demolition or reconstruction work commencement, the conditions of the structure to be demolished must be surveyed, as well as of adjacent structures and utility lines, and the survey's result recorded in the construction log. Upon this survey the Contractor shall draw up a detailed schedule (technological procedure) of demolition works which shall be approved by Engineer. Changes in the technology must also be approved by Engineer.

The permission for demolishing existing buildings and structures must be applied for in writing from Engineer; the application shall include the demolition work schedule. No demolition work may be executed before the Engineer's permission is obtained, and before temporary construction or other activities are carried out, necessary to ensure the operation and/or bypass of existing equipment, or safety during the demolition works.

2.1.5.3. Protection of existing structures

The method of ensuring safety in the course of demolition and construction works shall comply with relevant legal regulations.

Prior to the demolition works commencement, the endangered area shall be marked out according to the work technology elaborated, secured against unauthorised access. Underground cavities shall be filled or secured otherwise. Utility lines (sewers, water mains, gas, electricity) must be disconnected and secured against any possible usage during the demolition work performance. If they cannot be disconnected due to operational reasons, rules for they operation during the demolition work performance must be determined.

VODOVOD I KANALIZACIJA D.O.O. VIK DANILOVGRAD
STRABAG AG

Unless it is contrary to valid legislation, the endangered area where the work is to be executed must also be secured with full fencing min. 1.8 m high. If the area cannot be fenced off due to any reason, it must be secured by guarding or another way approved by Engineer.

The Contractor shall not demolish or remove any existing buildings, structures or other objects, including trees, regardless whether they are marked in the construction design or not, excluding those for which the Contractor has obtained specific instructions from Engineer. The Contractor shall make maximum effort to protect these structures against damage, including houses, buildings, fences, or trees, situated within or close to the construction site.

The Contractor is obliged to carry out all necessary temporary works to secure all underground utility lines in their original condition. Their condition after the work termination must not be worse compared to the condition in which they were before the work commended.

In the case of temporary shutdown and bypass of part of sewer systems, the Contractor shall provide all pumping and other technical equipment necessary for ensuring continual operation of the sewers, and make all measures to prevent flooding of houses and surrounding areas. For bypassing existing technological devices within a water or sewer structure, or a WWTP, the Contractor must obtain also the Employer's permission for the demolition work commencement.

Any property situated in the close proximity to the Work shall be protected against damage which could be caused by vehicles, ground sinking, vibrations, pressure wave, etc. Any damage caused shall be removed by the Contractor at his expenses and the condition of the property in question shall be restored to its original condition.

Should the work be executed close to, through, under or above existing structures, piping, cable lines, etc., the Contractor is obliged to provide their temporary support or wrapping preventing their sinking or damaging, prevent leakage of liquids or gases from piping, explosions and other hazards.

Should any leakage of liquids, damage or other hazards occur, the Contractor shall immediately inform Engineer and the Employer, and shall elaborate a report including photographic documentation and necessary information about the accident.

Damaged structures, piping, cables, etc. must be immediately restored to their original condition according to the Engineer's and relevant operator/owner's instructions, at the Contractor's expenses.

2.1.5.4. Backfilling and terrain works

All empty holes/pits shall be filled with soil compacted to the same compaction degree as the surrounding soil/terrain and the terrain shall be finished according to the Engineer requirements.

D.O.O. VODOVOD I KANALIZACIJA VIK DANILOVGRAD
STRABAG AG

2.1.5.5. Filling and sealing of unused piping

In places where existing water mains or sewers are to be connected to the newly-constructed system, the water mains or sewer sections below the connection shall not be further operated.

Unless it is contrary to valid legislation, sections of unused sewer piping shall be sealed with concrete plugs min. 1 m long at each end and between shafts. Shafts situated within the unused sections shall be demolished to the depth of 500 mm below the formation level, empty spaces filled with approved filling materials and the terrain redone according to the surrounding area.

2.1.6. Earth works

Earth works shall be designed and executed as specified in relevant legal regulations. When designing earth works, the Contractor is obliged to locate all utility lines and other obstacles (underground spaces, old works, etc.) in terms of their direction and depth. The construction design must include marked utility lines and other obstacles below the ground, on and above the surface. Accurate lay-out must be verified and confirmed by the lines operators prior to the earth work commencement.

The decisive factor during earth works are geological conditions of the location concerned in the course of the works. Prior to the earth work commencement it is necessary to study all existing documents submitted by the Employer, related to engineering-geological and hydro-geological surveys. The earth work method shall comply with the geological profile described and with data on the ground water level and character.

Prior to the earth work commencement, the Contractor must determine the position of all underground lines within the site and its immediate surroundings, and ask their operators to lay them out. No earth works may start before all underground lines have been laid-out.

All earth works shall be executed with respect to the local conditions and in compliance with relevant legal regulations. All conditions of the legal regulations must be met.

2.1.6.1. Advance workings

The construction site contains a large number of obstacles which must be taken into account for the work performance. They include (indicative list): crossing with ditches situated on both sides of main roads; crossing with roads, railway and other obstacles; underground lines (HV and LV lines, telecommunication cables, existing sewers and water mains, house connections, heating piping, gas piping, street lighting cables, military cables, and other utility lines); aboveground lines (e.g. HV and LV cables), bushes and trees.

During the advance workings as well as the Work realisation, the Contractor shall cooperate and coordinate his activities with relevant authorities and operators of existing lines.

The Contractor shall get acquainted with all aboveground and underground lines which may affect the Work realisation in any way. The Contractor shall be responsible for laying-out all existing lines and for reporting eventual damages caused by construction activities to the lines which are to be operated during the work performance and after the work termination.

Prior to the work commencement, the Contractor is obliged to apply in writing to relevant operators for laying-out utility lines and piping. The vertical position of these lines shall be determined through carefully performed manual excavations. The Contractor shall bear all costs related to laying-out thee utility lines. No earth works may start before all underground lines have been laid-out and without the Engineer's approval!!!

Should it be considered necessary (in sections where laying-out individual lines could be affected by adjoining underground lines), transverse verification boreholes shall be made and accurate position of the underground lines determined.

Since the position of utility lines marked in drawings may differ from their real position, field research is required to be performed prior to the work commencement in order to determine the position of utility lines. Upon data found, re-laying of lines may be carried out in the course of earth works, if this is necessary.

In sections containing vegetation this shall be cleared as specified in valid regulations.

In agriculturally utilised areas and green belts, the cultural bed shall be scraped to the physiologically effective depth, deposited (according to the Documentation of site organisation) and used for backfilling after the temporary land occupation termination.

Advance workings, except the above-described activities, include also the elaboration of digital photographic documentation of structures and buildings located in the close proximity of trenches. The number of photographs and required details shall be agreed upon with Engineer before the documentation work commencement, and the photographs shall be taken at the Engineer's presence. Such photographic documentation shall be elaborated for each construction and shall be saved on a separate CD-ROM; copies of all such CD-ROMs shall be submitted to Engineer. Printed version of the documentation shall be made only if requested by the Employer.

All works shall be carried out during operation. Prior to the work commencement, both the Employer and Contractor shall obtain complete information on the operation in risk sections of sewers, pumping stations, and water reservoirs.

2.1.6.2. Site excavation

Rock material grading

Rock material shall be graded according to the difficulty of its breaking and removing as specified in valid regulations.

Earth works marking-out

Prior to the earth works commencement, the spatial position of building structures shall be marked out and secured with anchorage marks.

Unless it is contrary to valid legislation, marking-out of corner points during excavation shall be secured with benches places 1-2 m from the trench outline. A square grid shall be used for detailed marking-out of excavations and landscaping. Slope of cut-and-fill structures shall be marked with points placed from each other according to the visibility given by the terrain

O.D. VODOVOD I KANALIZACIJA VIK DANILOVGRAD
STRABAG AG

configuration, with max. distance of 20 m. Outline of surface structures shall be marked with outline benches. The level line of future mounds shall be marked with lattice crosses anchored by axis stakes.

Excavation of trenches and pits

Unless it is contrary to valid legislation, trenches and pits shall be excavated manually or mechanically; excavations close to utility lines must be carried out manually. Excavations may be carried out mechanically for suitable soil types provided that the soil concerned is suitable for pipe laying, maximally to 10 cm above the bottom edge of the structure or bottom of the pipe. Loosening soil on the excavation bottom is not allowed. A layer of the 0-63 fraction gravel or sand gravel shall be laid on the trench bottom to protect it against mudding. The stabilisation layer shall be compacted, its maximum thickness after compacting may be 20 cm. Then a bed for piping shall be made. Each foundation bottom must be approved by Engineer. If foundation pits contain sand or gravel, excavation works must be adjusted to the character of these incoherent materials and, unless specified otherwise by Engineer, trenches shall be excavated in 10cm layers to prevent sinking of the surface and forming caverns. In such cases the Contractor is obliged to obtain the Engineer's permission for the work procedure.

No additional work and costs shall be accepted resulting from the Contractor's wrong selection of a technological procedure of trench excavation.

If any finding is discovered which may not be excluded as historical, archaeological or important in any other way in terms of the public interest, relevant regulations shall be observed.

Soil excavated from trenches and pits shall be deposited in temporary places specified in the Documentation of site organisation.

Handling topsoil

When performing construction works of any kind, the cultural bed shall be scraped. The topsoil shall be removed within the trench width as specified in the Main design and deposited appropriately to be used for backfilling and re-cultivated.

Topsoil which will become unsuitable due to the Contractor's activities shall be replaced with suitable topsoil at the Contractor's expenses.

Filling of trenches and pits

Trenches and pits shall be backfilled with excavated soil in compliance with relevant regulations.

Unless it is contrary to valid legislation, trenches under communications shall be backfilled with aggregate or grouted gravel sand from the excavation, and non-compactable excavated soil shall be deposited in permanent a dumping site. Trenches and pits located within the green belt shall be backfilled with excavated soil with horizontal transfer to a temporary dumping site.

Soil unsuitable for backfilling shall be replaced by the Contractor with a suitable backfilling material at his own expenses. The risk of necessary replacement of unsuitable backfilling materials under communications with suitable ones shall be included in the tender price.

2.1.6.3. Draining excavations

Excavations must be kept dry, without a permanent water level regardless of the water source, so that buildings may be founded or piping laid in dry conditions. The method of draining trenches and pits shall be approved by Engineer. If groundwater must be pumped during earth works, the Contractor shall obtain permission for such handling from a relevant state authority and public interest organisations.

Unless it is contrary to valid legislation, the following may be generally stated:

- Trenches shall be drained with drain pipes laid in collecting grooves or deepened parts of trenches. The number of grooves, size and number of pipes depend on affluent to the trench, longitudinal slope, etc. Drain pipes shall be backfilled with gravel, gravel sand of the same particle size. Sand or grouted sand may not be used for backfilling.
- The minimum lateral slope of the trench bottom towards the collecting groove or drain pipe laid in the deepened part of the trench is 3 % .The trench bottom shall be backfilled with gravel sand 15 cm thick which will remove collected water towards the groove or drain pipe. If the bottom part of the trench is excavated in rock, drain pipes may be replaced with hand placed rockfill.
- Pumping sets must be located in pumping shafts the number of which must be determined according to the quantity and quality of groundwater and surrounding soil. For permanent affluent, pumping must be provided 24 hours a day. If a trench is to be drained, and not every action is specified in detail, the tenderer is considered to have included setting the pump, water pumping, pumping system availability, as well as pumped water disposal in the price, i.e. all activities necessary for providing a dry base for the pipe bed.
- The design of lowering the groundwater level in fine sands, especially in built-up areas, shall prevent washing or sucking-off of fine particles from the surrounding soil or from backfilling material.
- For deep-seated groundwater level lowering the Contractor shall elaborate in advance a project of groundwater level lowering. This project shall be submitted to Engineer for approval. The Contractor shall execute at his own expenses test boreholes, or pumping tests, in a number sufficient for quality elaboration of the project.
- If the bed is at risk to be washed out with flowing water, it must be protected with clay or concrete dikes or with drainage. The dikes shall be made perpendicularly to the piping. They shall be 60 cm wide at the foot and 20 cm at the crest, and 30 cm high above the piping top. The dike location shall ensure that the crest of the lower placed dike was at least 5 cm above the top of the piping at the next higher-located dike. The lower part of the dike must be made before the bed is laid, below the bed level. The

VODOVOD I KANALIZACIJA DANILOVGRAD ViK
STRABAG AG

upper part shall be made after the piping is laid. Clay material shall be laid in 15cm thick, compacted layers. When using concrete dikes, pipe dilatation must be ensured.

- The Contractor shall be fully responsible for setting and operating temporary pumps for draining excavation pits during the construction.
- The Contractor shall be responsible for the lease or purchase of pumps and pipes, payment for power consumption, and other related expenses. The Contractor is obliged to supervise the pump operation. If a breakdown due to flooding occurs, the Contractor must remove the breakdown within 30 minutes. The capacity of pumps shall correspond with the expected maximum flows occurring during the construction.
- When two parallel piping lines are to be constructed, joint draining of both trenches in the deeper trench and joint pumping of water is expected.
- If longitudinal drainage is laid on the trench bottom, the Contractor must blind it after the construction completion and restore the underbed layers to their original condition. No longitudinal or transverse draining element may remain underground after the construction completion, which could affect the groundwater flows in the area concerned.
- In places where the sewerage/water mains will run below the groundwater level, a sealing barrier shall be installed in the trench each 150 m. Existing soil shall be replaced with pervious incoherent soils (backfilling) which may serve as drainage and affect the groundwater flows in the area concerned. The sealing barriers shall be installed below the foundation bottoms along the trench width and 1m length, their height shall be 1 m above the standing groundwater level. Outside communications the se sealing elements shall be made of clay soil, within communications of poor concrete.
- If existing drain pipes are cut through during the trench excavation (which may be expected especially in rural areas), the Contractor is obliged to restore the drainage to its original condition after backfilling.

2.1.6.4. Securing excavations

Trenches for sewer systems reach to 4-5 m, exceptionally even deeper. Due to this, excavation walls must be secured with sheeting in compliance with relevant regulations. The Contractor shall provide excavation sheeting in all places where it is necessary regarding work safety and stability of walls and surrounding area and where it is specified in the Main design or determined by Engineer.

Unless it is contrary to valid legislation, the following may be generally stated:

- Vertical walls of manually excavated trenches must be secured against collapsing with depth bigger than 1.3 m in built-up areas and 1.5 m outside built-up areas. With a view to the soil conditions (shall be assessed by Engineer) this depth may be lowered to 70 cm. If workers are expected to enter these trenches, their minimum clear width must be 80 cm.
- Excavations shall be secured with the following sheeting types:

- Horizontal sheeting – for dry, little compactable coherent soils
- Poling sheeting – where a higher ground pressure is expected, for the excavation wall stability the sheeting planks must be driven together in the course of excavation (partially coherent soils)
- Overall sheeting systems – for incoherent soils
- Steel sheet piles – in strongly compactable soils and incoherent soils below the groundwater level.

- Portable overall sheeting systems are suitable for mechanically excavated trenches.
- Trenches in incoherent soils or at high groundwater level must be secured also with little depth. For bigger depths and adverse geological conditions sheet piles shall be used; their utilisation may be ordered by Engineer in exceptional cases (work safety).
- Sheeting must be designed to ensure safety of persons working below the excavation walls, to prevent sinking of the surrounding ground, and to ensure stability of finished or constructed structures in the vicinity.
- The Contractor shall adjust technological procedures of using mechanisms and sheeting, and of the excavation works to local conditions. If required, the Contractor shall take necessary measures to secure statically structures in the surroundings. The Contractor is responsible for all damages caused by insufficient static securing.
- The Contractor is responsible for selecting a particular sheeting type. However, the sheeting must in any case correspond to the work performing method, trench depth, soil type, distance of neighbouring structures, groundwater and utility lines occurrence in the trench, safety regulations and technological rules. The sheeting proposed for various types of work must be included in the quality control plan.
- If the soil stability changes in the course of the work, the sheeting type and scope must be adjusted to the actual conditions. In bigger depths (over 2 m) the Contractor is obliged to make static calculations which must be approved by Engineer before the given sheeting type is used.
- When compiling their bids, tenderers are obliged to get acquainted in detail with geological conditions, technical design of water mains and other structures, and other circumstances and hazards which may affect the sheeting type selection. The Employer shall not define the sheeting type and it is up to the Contractor what type he will propose and use in his bid in compliance with valid legislation. Despite this, the Employer shall not accept any additional requirements and additional costs if more expensive sheeting systems must be used, due to gravel or increased groundwater level occurrence, confined conditions within main roads, crossing with utility lines, water courses, railways, push-broaching starting spots.
- Gradients of excavation slopes are determined by the construction project. For work executed on slopes with gradient bigger than 1:1 or depth exceeding 3 m, measures preventing worker slipping or material collapsing must be taken. Slopes and bottoms of excavations in built-up areas, the stability of which is at risk due to loading or operation

of existing structures, must be secured so as the structures concerned, and also their operation, if necessary, are not in danger of collapsing during excavation and safety of the excavation works is maintained.

- Piping, utility lines, cables exposed during excavation must be secured against sinking, buckling and disconnecting.
- Underground construction must be performed in compliance with the Main design and specified technological procedure. The project must deal with the technological progress of work, soil transport, other material transport, foundation pit drainage, ventilation, flooding. Special attention shall be paid to securing surface structures against sinking.
- Drilling may be executed only in compliance with the construction project. Damage to underground structures, lines and other objects must be prevented. The drilling rig and list of trained workers must be approved by Engineer. Pipe push-broaching shall be executed with the use of a push-broaching device. No persons may be present in push-broached pipes.
- If a steel protection pipe is used for push-broaching, the starting pit shall be secured with suitable sheeting. Push-broaching shall be executed between starting pits directly. The starting pits shall be used for shafts.
- When two parallel piping lines are to be constructed, joint sheeting of both trenches is expected if the difference in their depths does not exceed 1 m. If one trench is deeper by more than 1 m than the other one, sheeting for both trenches shall be included.
- After the work completion, sheeting and its securing shall be removed. The removal shall be made in a way which will not damaged the surface or any part of new structures.

2.1.6.5. Fills and backfills

Backfilling and filling material compaction shall be performed in specified layers according to the piping material and in compliance with relevant regulations.

Unless it is contrary to valid legislation, the following may be generally stated:

- Only a suitable, incoherent material, approved by Engineer, may be used for backfills within local roads and drive-on areas. The suitable material is specified below. For backfills in main roads, compacted gravel sand shall be used over the whole height of the backfilling, unless specified otherwise in a relevant permission. When piping is situated in communications, basic rules must be observed in order to prevent defects due to incorrect technological procedures. The Contractor must observe these rules, monitor and evaluate them according to actual situation on the site.
- Soil unsuitable for backfilling of piping shall be deposited on a permanent dumping site and replaced with a suitable filling material by the Contractor at his own expenses! The risk of necessary replacement of unsuitable backfilling materials under communications with suitable gravel sand shall be included by the Contractor in the tender price.

VIK VODOVOD I KANALIZACIJA DANILOVGRAD
STRABAG AG

- The basic problem of the work quality is the backfilling of foundation trenches which shall be made in compliance with valid regulations. The backfilling shall be made with compactable soil, approved by Engineer, compacted in layers (max. 20 cm). The soil moisture during compacting must not differ from the optimal moisture value determined by the Proctor standard compaction test by more than 3 %; moisture in loess soils must not drop during compacting below the optimal value by more than 2 %. The thickness of layers shall be adjusted to the compaction method used, trench width and material compactable qualities.
- Backfilling must be performed along both sides of a structure simultaneously in order to prevent uneven pressures. Pipe trenches shall be filled along their whole length after the piping is laid and relevant tests, approved by Engineer, performed. It is necessary to respect technical conditions for pipe laying supplied by the pipe manufacturer, and static assessment of the designed laying method, depending on loading and geological conditions.
- Trenches and pits located within the green belt shall be backfilled with excavated soil without larger particles with horizontal transfer to a temporary dumping site.
- Backfills must not contain organic soils, mud, peat, humus, and topsoil with organic substances content higher than 6 % of dry volume density of particles below 2 mm (ISO/CD 14688-2). This provision does not apply to surface finish of backfills (humus spreading).
- The following must not be used for backfilling without treatment or special measures:
  - Saline soils containing dissolved salts over 10 %;
  - Volume-unstable soils and rocks (absorptive clay and clay shale) in which changes in volume bigger than 3 % occur at normal climatic conditions;
  - Clays with yield point over 60 % or plasticity index over 40 %;
  - Clay soils with consistency index below 0.5;
  - Rock soils in which deformation occurs due to climatic actions and loading during the backfill lifetime (e.g. disintegration claystones.)
- Only soils suitable according to highway construction regulations shall be used for filling and backfilling.

2.1.6.6. Compacting

Unless it is contrary to valid legislation, the following may be generally stated:

- Within the whole active zone thickness the specified minimum compaction level of 100 % Proctor standard must be kept. The minimum deformation modulus value from the second loading cycle of Edef,2 = 45 MPa must be reached on the plain (the upper level of a mound). A technological procedure must be specified for the mound formation and the mound must be formed under an expert supervision. Relevant regulations shall be observed during the mound designing, forming, checking, and accepting.

- Compaction shall be performed with a suitable mechanical equipment in layers of max. 20-30 cm. Backfilling must be performed along both sides of a structure simultaneously in order to prevent uneven pressures. When compacting is executed close to a structure, piping must be prevented from buckling or damaging, and insulation from damaging. Sheeting and other auxiliary equipment must be removed before backfilling is made, or pulled out a the time of compaction.
- Compacting devices and technological parameters of compacting (thickness, layers, compacting device type, number and speed of compacting cycles) shall be selected by the Contractor and approved by Engineer according to the loose material properties and required level of compacting. In serious cases the compaction level and technology shall be determined upon the compaction test results.
- Stability, or changes in properties of the loose material shall be checked every 2000 m3 of laid material, and the Contractor shall inform Engineer about any changes, should they occur.
- During the mound realisation, regular tests shall be performed acc. to relevant regulations. Unless specified otherwise, the following shall be checked during loose material compaction:
  - Loose material suitability;
  - Dumped layer thickness, number of travels, technological parameters of compaction;
  - Reached compaction by the relative density value ID.
- Required tests of compaction shall be made continuously (even on individual filling layers), number of tests acc. to relevant regulations, this is the basic precondition of the work quality.
- Control tests of the compaction level shall be performed especially in places where the compaction quality is in doubt or compaction parameters specified in the project were not met. Places of the compaction level tests shall be determined by Engineer.
- Compaction control in incoherent materials from samples collected shall be performed every 2000 m3, unless stricter requirements are specified in the project. With indirect methods, the test frequency shall be determined by the project, or if this is not the case, the test frequency shall be increased with indirect methods by at least three times compared to direct methods frequency. The compaction level control by indirect methods is given by relevant regulations.
- The results of compaction level control tests shall be handed over as specified in relevant regulations. A compaction test report shall be elaborated and attached to the Contractor's documentation during the construction handing-over. If the test results are unsatisfactory, the Contractor is obliged to recompact, adjust or replace the layer (structure part) in question at his own expenses so as the layer meets specified criteria. A loose material must be replaced if the required compaction level may not be reached by further compacting or adjusting.

STRABAG AG

2.1.7. Construction founding

2.1.7.1. Design principles

Principles of the design, static calculation, and construction of foundation structures must comply with valid legislation for civil engineering, geotechnics, construction founding and concrete structures.

Requirements on the geotechnical design shall comply especially with the provisions of ENV 1997-1:1994 – Eurocode 7, Geotechnical design, and shall be based on:

- Structure type and dimension;
- Construction conditions related to the surrounding area;
- Founding conditions;
- Groundwater level;
- Area seismicity;
- Mutual effects of the construction and the environment (hydrology, surface waters, seasonal moisture changes, area sinking, etc.).

The procedure shall executed according to the complexity of founding conditions, structure difficulty, and project preparation grade.

2.1.7.2. Geotechnical categories

Three geotechnical categories are determined:

Geotechnical category 1– simple and two-storey houses and agricultural buildings with the max. design load on masonry of 100 kN/m. Foundations in the form of common types of flat or pile foundations. Retaining walls and excavation sheeting if the total difference does not exceed 2 m. Excavation works must not be complicated and not executed below the groundwater level. Founding conditions must be sufficiently clear.

Geotechnical category 2 – simple, not problematic types of structures and foundations, and founding or loading conditions are not unusual or exceptionally difficult. Common structure types: flat foundations, raft foundations, walls and structures retaining or supporting soil, excavations, pillars and excavations for bridges, mounds and earth works, anchor blocks, etc.

Geotechnical category 3 – very large or unusual structures with abnormal risk, exceptionally complicated founding conditions, and structures in seismic regions.

2.1.7.3. Foundation soil

Categorisation of foundation soil under flat and pile foundations is determined by relevant regulations.

Within the project, suitability of a founding method for building structures is assessed according to the geologic survey, i.e. the foundation soil shall not be stressed to the bearing capacity limit according to the geologic survey. After exposing the foundation bottom, the Contractor must reassess the suitability of the founding method according to actual founding

D.O.O. VODOVOD I KANALIZACIJA DANILOVGRAD ViK
STRABAG AG

conditions. It means that upon mechanical properties of the foundation soil under the whole structure, the Contractor shall make a calculation of stressing the foundation soil according to limit states. The foundation soil must not be stressed to the limit state of its bearing capacity.

2.1.7.4. Depth of foundation

The depth of foundation of external structures with horizontal foundations must be sufficient to ensure that the soil under the foundation will not freeze. The foundation bottom must be situated in a non-freezing depth.

2.1.7.5. Foundation structures

The foundation structure type shall be selected according to the way of transfer of loading from the superstructure to the foundation soil and upon the depth of foundation. There are two foundation types: horizontal (flat) and vertical (depth) foundations. The structure type shall be selected by the Contractor's designer.

2.1.8. Water proofing

Water proofing protects the construction work against the effects of ground moisture and water. The water proofing design must be based on detailed geological and hydro-geological surveys containing data on the struck and standing groundwater levels and on a chemical composition of groundwater.

The waterproofing layer is formed by

- Base layer
- Damp-proof membrane
- Protective layer

2.1.8.1. Base layer requirements

Unless it is contrary to valid legislation, the following may be generally stated:

- Vertical and sloped proofing layers shall be laid on an 8-10 cm thick base concrete layer or foundation structure. The base layer shall be laid on natural ground on which a 25 cm thick gravel sand sub-base shall be made, serving as a drainage layer. The base concrete may be levelled with a concrete screed to create an even surface for laying bitumen felts. The base surface unevenness must nor exceed 5 mm per 2 m.
- Under a vertical waterproofing layer, a brick, concrete or reinforced-concrete base shall be made if the waterproofing layer shall be laid from inside the structure. If the waterproofing shall be laid from outside the structure, the base is formed by the basement masonry.
- The base must be dry, clean, firm, and without sharp protrusions to prevent puncturing of the bitumen felts. It must not contain cavities or fractures. Corners must be rounded.

VODOVOD I KANALIZACIJA d.o.o. ViK DANILOVGRAD
STRABAG AG

2.1.8.2. Waterproofing bitumen felts

The basic function of waterproofing materials is the protection against water. Regarding material they may be coated, made on bitumen-felt, foil or coating materials base. However, their base is a supporting inlay provided with a protective layer.

The basic component of bitumen felts is a supporting inlay, with both sides provided with a cover bitumen layer. Categorisation of bitumen felts and waterproofing foils is specified in relevant regulations and may be as follows:

Type A bitumen felts: the basic layer is a machine rag felt weighing 330 or 500 g/m2 without a cover bitumen layer. Virtually unsuitable for waterproofing purposes because they are absorptive and little resistant to decay.

Type R bitumen felts: the basic supporting inlay is provided with a cover bitumen layer on both sides up to 1 mm thick. The waterproofing layer is laid on a dry base provided with a penetration coating while more layers of felt are applied into a hot bitumen coating and then a top coating is made.

Type S bitumen felts: the basic supporting inlay is provided with a cover bitumen layer on both sides over 1 mm thick. The bigger thickness enables the felts to be torched on the base. Suitable for insulating foundations and the whole substructure against ground moisture and water, some types also against pressure water. The latest types are modified with rubber containing mineral fillings.

Self-adhesive felts: without the supporting inlay, with bottom side provided with a self-adhesive layer protected with a silicon paper. They are incorporated cold. The minimum overlapping of these felts is 80 mm longitudinally and 150 mm transversally. Work with these felts may be executed with the minimum ambient air temperature 15 °C. At lower temperatures the felt as well as the base must be heated with hot air. The self-adhesive felts are used especially in places the conditions of which is not suitable for other felts. They are effective for waterproofing underground garages and spaces, water reservoirs, etc.

Bitumen felts are produced 1 m wide and 10 m long. The minimum recommended overlapping is 100 mm.

2.1.8.3. Protective layer requirements

The protective layer protects the waterproofing layer against adverse effects.

Unless it is contrary to valid legislation, the following may be generally stated:

- Vertical and sloped waterproofing (up to 45 degrees) shall be protected with cement screed min. 30 mm thick or with dilated concrete dab 30-80 mm thick. If the waterproofing is not protected directly with the floor, then the concrete dab is not necessary.
- The proofing layer on which a concrete slab shall be laid, must be protected with a 30 mm thick dab for a slab with max. thickness 200 mm, and with a 50 mm thick dab for a slab with max. thickness 600 mm. For thicker slabs the dab shall be 80 mm thick.

STRABAG AG

- Bitumen proofing must not be pulled or sheared. The maximum pressure on the bitumen felts protecting a structure against moisture changes is 0.5 MPa. The waterproofing shall be used from the sides affected by hydrostatic pressure.
- Special requirements are laid on the protective layer against mechanical damage of vertical waterproofing layers. Unless specified otherwise in the Employer's design documentation, these shall be protected with a 100 mm thick brick retention wall made from solid bricks up to 1.5 m before backfilling with soil is executed. The retention wall must be dilated every 6 m. Rubber boards min. 7 mm thick, or plastic sheets min. 3 mm thick may be used, too. It is also possible to use geotextiles with min. surface density of 500 g/m2.

2.1.8.4. Waterproofing against aggressive water

If the groundwater is aggressive within the meaning of relevant regulations, both the damp-proof membrane and protective layer must be protected against its effects. The protective layer design must then comply with provisions of the relevant regulations.

Unless it is contrary to valid legislation, the following may be generally stated:

- There are three types of an aggressive environment: slightly aggressive, medium aggressive, and strongly aggressive.
- Slightly aggressive environment: concrete, reinforced-concrete or mortar mixes shall be provided with primary protection. For concrete structures this protection includes selection of suitable cement, water-resistant concrete, and a thicker reinforcement protective layer. Retention walls shall be made of hard-baked bricks laid in special mortar or mastic.
- Medium and strongly aggressive environments: since the primary protection is not sufficient, secondary protection must be added in the form of further waterproofing or bitumen coatings (vertical and sloped surfaces), or cast bitumen (horizontal surfaces). Acid-proof bricks may be used, too, laid in bitumen-cement mastic.
- With the occurrence of flowing aggressive water, clay shall be used as protection of structures against such water.
- If the environment aggressiveness is assessed according to EN 206-1, the concrete design, production, laying, and curing must also comply with this standard, as well as the protection of concrete structures against an aggressive environment.

2.1.9. Concreting and use of reinforced-concrete

2.1.9.1. Concrete types and water-resistant concrete

Minimum requirements on the concrete quality according to EN 206-1 (unless specified otherwise in the Employer's requirements):

Tanks, pits, chambers with wastewater	C30/37 XA1
Tanks, pits, chambers with potable water	C30/37 XC4
Tanks, pits, chambers with wastewater exposed to frost	C30/37 XA1

D.O.O. VODOVOD I KANALIZACIJA VIK DANILOVGRAD
STRABAG AG

Tanks, pits, chambers with wastewater exposed to frost	C30/37 XC4
Foundations, concrete structures in dry environment	C25/30 XC2
Concrete filler in dry environment	C20/25
Concrete filler exposed to wastewater effects	C30/37 XA1
Blinding concrete	C12/15
Concrete encasement of structures	C12/15
Concrete saddles	C12/15

Water-resistant concrete is a collective name for watertight concrete and lasting concrete:

Watertight concrete – concrete resisting to pressure water to such an extent that its front bears no visible seepages or wet stains.

Lasting concrete – concrete resistant to mechanical, physical, chemical, and atmospheric effects regarding their duration and action.

Concrete with increased content of admixture water – concrete containing admixture water of 210 l/m3 dense concrete or higher at the compaction termination moment. Usually ready-mixed concrete, pumped or cast concrete, or concrete without coarse aggregate.

Tough concrete – concrete substituting lining of natural rocks (stone), resistant to abrasion and hammering by sediments drifted by flowing water and to impacts of floating objects, as ice floes, tree trunks, etc.

During the project realisation especially water-resistant concrete shall be used. The basic technical requirements on water-resistant concrete regarding its location in a structure, position in relation to water level, stressing method, and structure thickness are specified in relevant regulations.

Unless it is contrary to valid legislation, the following may be generally stated:

- Concrete water-tightness shall be determined as specified in relevant regulations. Concrete may be considered water-resistant, if the results of a water-tightness test on equipment specified in the relevant regulation are equal to the maximum seepage value of 50 mm or less, and the average value is equal to 20 mm or less. The water-cement ratio must not exceed 0.55.
- During the water-tightness test the test sample is loaded with 0.1 MPa for the first 48 hours, then the pressure is increased to 0.3 MPa for 24 hours, and at the end to 0.70 for 24 hours.
- The maximum permissible hydraulic pressure on the structure depending on its thickness resisting to the water seepage is specified in relevant regulations.
- Concrete exposed to permanent or, in the area of water-level variation, to intermittent effects of aggressive waters is required to be resistant against corrosion. The protection level (primary, primary and secondary, secondary protection) shall be selected according to the water aggressiveness level in compliance with relevant regulations.

VIK VODOVOD I KANALIZACIJA DANILOVGRAD
STRABAG AG

- Chemical corrosion resistance is specified in relevant regulations. Concrete is considered resistant to chemical corrosion if tests prove that it is watertight, and – within the meaning of the relevant regulations – its porosity is not higher than 16 % vol., or its absorptivity is not higher than 6 % w.

2.1.9.2. Concrete classes

Concrete classes are specified in relevant regulations and mark the concrete quality according to the requirements on its compressive strength. Concrete is produced in classes for which requirements are specified on cylinder and cube strength in MPa at the age of 28 days. The concrete classes are from C8/10 to C100/115 (EN 206-1) according to the guaranteed compressive strength in MPa. Concrete consistency must comply with ISO 4103.

2.1.9.3. Foundation soil

Prior to concreting and using reinforced-concrete, the Contractor must assess the foundation soil characteristics according to relevant regulations. The Contractor is obliged to inform Engineer on all findings related to facts which could have adverse effects on the terrain bearing capacity and sinking and possible aggressiveness of soil or groundwater. Further, effects of frost to the foundation bottom must be assessed. The Contractor is obliged to invite Engineer to inspect and approve the foundation bottom bearing capacity necessary for further construction.

2.1.9.4. Bonding materials

General

The methods of concrete production and storage are specified in EN 206-1. Engineer, upon his request, must be informed about the concrete composition. If concrete not complying with standard characteristics is used, the Engineer's approval must be obtained. Requirements contained in Montenegro technical standards related to aggressiveness resistance must be observed.

Cement type

A cement type complying with these specifications or with the Engineer's instructions shall be used. For the production of concrete in contact with sewage or waste water or exposed to a wet environment or atmosphere, only cement resistant to sulphates shall be used, unless otherwise approved by Engineer. The Portland cement shall be used in all other concrete types, unless otherwise approved by Engineer.

Cement types complying with the requirements of EN 197-1 shall be used for the water-resistant concrete production:

- Portland slag cement marked CEM II/A-S and CEM II/B-S, suitable for concrete with increased resistance to corrosion;
- Blast-furnace cement marked CEM III/A, CEM III/B and CEM III/C, suitable for massive and medium-massive structures;
- Blast-furnace cement marked CEM III/B, CEM III/C characterised by resistance to sulphates and suitable for concrete resistant to sulphate aggressiveness;

D.O.O. VODOVOD I KANALIZACIJA VIK DANILOVGRAD
STRABAG AG

- Portland cement marked CEM I, suitable for winter concreting and for thin-walled concrete resistant to repeated effects of frost (frost-resistant).

Cement supply and storage

Cement transport and storage must comply with provisions of relevant regulations.

Prior to ordering or supplying cement to the construction site, the Contractor shall submit a detailed list of sources, country/countries of origin, and trade names of cement producers to Engineer for approval.

Cement shall be supplied in silos, large-volume containers or closed paper bags according to its quantity and place of work performance. If cement is delivered to the site by trucks or other vehicles, it shall be reasonably protected against weather effects and contamination by dust, sand and organic substances. Engineer shall refuse any cement proven to have been deteriorated by water.

All the cement, except that stored in silos, shall be protected against atmospheric conditions, stored in a watertight and reasonably airtight building used only for this purpose. The building floors shall be elevated at least 300 mm above ground to prevent moisture absorption.

Cement refusal

Regardless of a test certificate submitted, Engineer may refuse any cement that failed other tests. Engineer may also refuse cement deteriorated due to inadequate protection, for any other reasons or in any other case when the cement lacks the quality required. The Contractor shall immediately remove all refused cement from the site at his own expenses.

2.1.9.5. Aggregate

Compact aggregate of class A, or class B according to EN 12620, shall be used for water-resistant concrete; fine aggregate shall be of class A.

Absorptivity of natural aggregate used for concrete resistant to chemical corrosion shall not exceed 1 % of the dried aggregate weight.

2.1.9.6. Concrete water

Water for producing and curing concrete must comply with relevant regulations.

Unless specified otherwise, water used for all purposes on the construction site shall be potable, clean, fresh, and without undesirable content of dust, organic substances, alkalis, salts, or other impurities, and shall comply with the requirements of relevant regulations.

If requested by Engineer, the Contractor shall supply samples of water proposed to be used during the construction so that Engineer can perform tests of the water suitability for the purpose given. The samples shall be supplied in a sufficient quantity prior to the tests performance and according to the schedule within the contract validity in compliance with the Engineer's instructions.

D.O.O. VODOVOD I KANALIZACIJA VIK DANILOVGRAD
STRABAG AG

2.1.9.7. Concrete additives and admixtures

An additive is a material added to concrete during its mixing in order to ensure a change of properties of the fresh concrete. Additives containing calcium chloride shall not be used.

Additives shall be used only if approved by Engineer and with respect to the manufacturer's instructions. Added quantities and method of usage must be approved by Engineer, who shall receive at least the following information:

Typical added quantity and adverse effects (if expected) due to the increase or decrease of the added quantity of the additive;

Chemical name(s) of the main additive(s) in the mix.

For water-resistant concrete coming to contact with potable water, only additives or admixtures with proven health harmlessness may be used.

Additives shall comply with relevant regulations.

2.1.9.8. Concreting technology

Provisions of EN 206-1 and other relevant regulations apply to concrete production, processing and curing.

The delivery shall include all works and auxiliary structures related to the production, transport, pouring, and curing of concrete, including casing with all auxiliary elements (anchoring, bracing).

Advance workings

Prior to the fresh uncompacted concrete and concrete production commencement, tests according to the provisions of EN 206-1 shall be performed.

Prior to the concreting commencement, the Engineer's written approval must be obtained. All construction equipment and materials required during concreting and for concrete curing shall be available on the construction site before the concreting commencement.

Concrete shall be poured and compacted under the direct supervision of a competent Contractor's representative.

Fresh concrete transport

During the transport of fresh concrete it must not be dismixed or otherwise deteriorated, e.g. by loosing any of its components, due to atmospheric effects, contamination, etc. The transport vehicle must be clean and empty and comply with the conditions specified in the transport procedure.

The primary transport time shall be determined so that after the termination of fresh concrete handling and processing on the site, at given ambient temperature and temperature of the concrete mix, the fresh concrete will reach the maximum value of 0.5 MPa required during the setting tests.

Other provisions related to concrete and ready-mixed concrete transport are given in EN 206-1.

Concreting

Concrete shall be poured as soon after its production as possible in a rate preventing its unnecessary transfer. In no case it shall be poured before its initial setting. Should the pouring be delayed after mixing and the concrete will start hardening, it must not be used and shall be removed from the construction site.

Pouring in layers

Concrete shall be poured in approved quantities and if possible in horizontal layers in a thickness allowing it to join perfectly with bottom layers by vibration, digging, or forming.

Unless otherwise approved by Engineer, concrete shall not be laid from a height exceeding 2 m.

Underwater concreting

Concrete shall not be poured underwater without the Engineer's written approval. If underwater pouting is necessary, the Contractor shall submit a detailed technological procedure and schedule of works to Engineer for approval.

Concreting under special climatic conditions

Unless it is contrary to valid legislation, the following may be generally stated:

- Conditions with higher temperatures are specified in relevant regulations, it is an environment with an average daytime temperature during at least three successive days exceeds 20 °C. In such conditions, the Contractor shall pay increased attention to the concrete surface curing in order to prevent it from cracking or rupturing. The Contractor shall perform concreting either early in the morning or in the evening as ordered by Engineer.
- Conditions with low and below-zero temperatures are specified in relevant regulations. Low temperature means that the average daytime temperature drops below 5 °C for at least three successive days (Portland cement). If concreting in cold weather is considered in the schedule, the Engineer's instructions and provisions of relevant regulations must be observed.
- Concreting at temperatures below 5 °C is forbidden, because the concrete surface must be heated to prevent its temperature from dropping below 5 °C for at least 72 hours. Temperature of water used for concrete curing must not be less than 5 °C.

2.1.9.9. Casing

Casing of monolithic structures complying with relevant regulations must be reliable and resistant to distortion caused by the total loading effects, which could lead to impermissible deviations of geometrical parameters of the finished concrete structure. The design must take into account the co-action of all horizontal forces and impact effects of fresh concrete transport and processing.

Casing and its supporting elements must be secured against shifting, loosening, buckling, or collapsing, and must allow gradual demoulding without damaging the concrete structure.

The method of casing realisation must ensure the structural part purpose and dimensional tolerances of the concrete surface. All dimensions given in drawings are final. Casing must be removed carefully and not before the time determined passes.

Increased requirements on demoulded concrete curing – covering and watering for at least 14 days.

Adjustment of construction joints:

- Profiling
- Inserting an expansive belt
- Inserting a grouting belt or hose
- Inserting another plastic section
- Controlled construction joints by inserting sections and expansive belts

2.1.9.10. Quality control of fresh concrete

Preliminary tests shall be carried out in compliance with EN 206-1. A preliminary test of fresh concrete shall verify properties of its components, workability values of fresh concrete and changes in time, maximum permissible transport time for ready-mixed concrete, pumpability of mixes intended for pumping, air content, fresh concrete volume density, concrete mix composition, etc.

Preliminary tests of concrete shall verify especially its strength within tested structures.

Control tests shall be carried out in compliance with EN 206-1.

The Contractor shall carry out the tests within an adequate scope and at the Engineer's presence, and shall also prepare necessary test samples. The test samples shall be supplied by the Contractor to an accredited testing laboratory.

The Contractor shall cover all expenses related to concrete tests as well as additional expenses if the tests must be repeated due to the Contractor's fault.

Suitability and quality tests apply to all required characteristics of both fresh and hardened concrete (cube strength tests).

2.1.9.11. Concreting schedule

Engineer must obtain a schedule of concreting and reinforced-concrete works and a scheme of individual working pours with constructional and dilatation joints (in compliance with the Contractor's design documentation) for approval. The approved concreting schedule is binding for both Engineer and the Contractor. The schedule must respect possible attainable efficiency of concreting, as well as circumstances which could cause delay in the concrete hardening, so that the number of constructional joints could be reduced to minimum regarding especially the surface quality.

2.1.9.12. Concrete curing

The final curing of concrete surfaces shall comply with EN 206-1 and other relevant regulations.

Protective bitumen layers shall be applied to external surfaces in order to protect the cover layer of concrete against aggressive effects of groundwater or other adverse substances. Protective layers shall be generally applied on all surfaces of concrete structures situated underground or in contact with underground water.

The Contractor shall supply and apply all coatings and protective layers according to the design documentation. The surface protective layer type shall be approved by Engineer, shall comply with relevant regulations and shall not endanger the environment.

All coatings and surface bitumen layers shall be applied strictly according to the manufacturers' instructions. All coatings shall be supplied to the site in sealed vessels with clearly marked manufacturer's name. All surface layers shall be applied by qualified personnel under the supervision and to the satisfaction of Engineer.

2.1.9.13. Concrete reinforcement

Only reinforcement complying with relevant regulations and corresponding to the requirements of technical design documentation may be used. XA2 and XC2 grade environmental effects (medium aggressive chemical environment) shall be considered for WWTP's and sewer systems.

Requirements on reinforcement storing, bending, welding, and positioning are specified in relevant regulations.

All measures and steps taken for the provision of safety of the specified reinforcement placing, including the supply and assembly of distance pieces, supports and auxiliary structures) shall be implemented in compliance with relevant regulations.

The reinforcement protection against corrosion depends on the permanent occurrence of an alkali environment. The alkali environments shall be ensured with a sufficient thickness of quality concrete around the reinforcement. The concrete thickness is specified in relevant regulations. The cover layer may be designed also according to EN 1992-1-1.

The delivery shall include also placing tie-up reinforcement made of mild steel including short auxiliary elements (distance pieces, etc.). Any reinforcement placed shall be approved by Engineer before the concreting commencement.

Steel used for prestressed reinforcement must be carefully protected against adverse climatic actions during transport and storage on the site. The steel must not come into contact with harmful chemicals (e.g. sulphur, road salt, industrial fertilisers). It must be stored separately according to its diameters and types on support pieces, protected against deterioration and corrosion.

2.1.9.14. Prefabricated sections and assembled structures

Prefabricated concrete sections both reinforced and without reinforcement shall comply with the requirements of relevant regulations.

Prefabricated concrete sections shall be produced either on the site or in a concrete production plant approved by Engineer.

V.O.D. VODOVOD I KANALIZACIJA DANILOVGRAD VIK
STRABAG AG

The Contractor shall take all necessary measures related to curing and protection of such sections after their production.

If faces of some prefabricated concrete sections assembled in any structure are to remain uncovered either internally or externally, such surfaces shall be treated in a uniform colour and pattern. All cement, additives, and other materials used during the section production shall be obtained from stable and approved sources during the production.

Concrete for prefabricated units shall be poured and compacted by methods approved by Engineer.

2.1.10. Sewer connections

Unless it is contrary to valid legislation, the following may be generally stated:

- Wastewater may be discharged into the public sewer system only upon a relevant authority's permission, if the applicant can prove that the wastewater will not:
  - Damage the sewer system and wastewater treatment plant, and endanger employees during treatment;
  - Endanger the WWTP operation, sludge treatment and its further utilisation;
  - Deteriorate limit values of contamination intended for wastewaters discharge from the public sewer system, and affect qualitative objectives.
- The sewer connection serves for connecting house sewerage to the public sewer system or to cesspit/septic tank/house treatment plant.
- The sewer connection is a section of piping which collects wastewater from a plot or outfall place of house sewerage piping of a structure or building, up to the orifice of the sewer connection to the public sewer system. This orifice is part of the public sewer system. The sewer connection collects wastewater from a structure or real estate which is connected to the public sewer system.
- The sewer connection design shall comply with the provisions of a relevant regulation and EN 752. Spatial arrangement shall comply with a relevant regulation.
- Basically every real estate must have a separate sewer connection, unless agreed upon otherwise with the public sewer system's operator. To the selection of a sewer connection material, the same principles apply as to water connections. Most commonly plastic pipes are used.
- The place where the sewer connection shall be connected or meters/inspection shaft located shall be determined by the public sewer system's operator. The connection may be connected to the sewer only through a branch piece or in another place determined by the operator. The PVC pipe orifice to concrete shafts must be made using a reducer (joining socket), it may not be concrete the PVC pipe directly into the shaft wall. Joining sockets provide watertight and hinged connection of the PVC pipe to the concrete shaft.

D.O.O. VODOVOD I KANALIZACIJA ViK DANILOVGRAD
STRABAG AG

- The location of individual connections in terrain (in trenches), distances between them, their depth, adjustments in their laying and connecting shall comply with a relevant regulation and other specialised standards.
- The sewer connection shall run along the shortest possible route and in one section from the real estate to the public sewer system. Principles of crossing with other utility lines must be observed according to relevant regulations.
- Sewer piping must be laid in a safe distance from building foundations, in a non-freezing depth or protected against freezing with thermal insulation.

2.1.11. Piping systems and utility lines outside buildings

All piping systems used within the construction must comply with the requirements of the Main design. Piping material, sealing, and laying shall be executed according to relevant regulations, or EN standards valid for the piping types used.

Prior to hand-over, the Contractor shall clean all piping, perform appropriate pressure tests approved by Engineer in pressure piping, and rinse and disinfect water supply piping.

2.1.11.1. Pipe laying

Piping shall be laid, bedding prepared, and backfills performed in compliance with appropriate regulations, EN standards, manufacturer's instructions, and with approved work safety plan for the construction site.

Unless it is contrary to valid legislation, the following may be generally stated:

- Piping shall be laid in sheeted trenches. In places with groundwater occurrence, a gravel sand or gravel layer and drainage shall be laid on the trench bottom. During pipe laying, trench draining must be provided, including draining of sewage waters.
- If a machinery-made trench cannot be excavated to an exact depth, the trench bottom must be finished of stabilised to the required gradient and shape manually before pipe laying. In places with socket joints, inspection pits shall be made. These pits shall be made only within the scope necessary to ensure the required joint sealing. The pits below the pipe sockets must be filled according to the laying method either with the bedding material or with backfilling material, compacted to a degree specified in the design documentation.
- The trench bottom shall be secured, according to geological conditions, as soon after excavation is made as possible, in compliance with the design documentation, to protect the ground material on the trench bottom from deteriorating due to climatic actions. Should the soil on the trench bottom be deteriorated due to exceptional climatic actions, the deteriorated soil must be removed and replaced with a bedding of sand or another suitable material according to the type of bedrock which shall be compacted to relative density of 0.8 or higher.
- Transport of material from a temporary dumping site within the construction site to the place of laying must be carried out with machines suitable for handling pipes.
- Piping, fittings, and valves must be cleaned, checked, and intact before laid to place.

D.O.O. VODOVOD I KANALIZACIJA VIK DANILOVGRAD
STRABAG AG

- The piping used shall placed in compliance with regulations and instruction of individual manufacturers of piping material used, and with particular conditions. Backfilling and filling shall be performed over the whole trench width with suitable materials and must be evenly compacted on both sides of the piping.
- The permissible bending angle of piping depends on the selected piping material and must not exceed values permitted by relevant regulations, or EN, and the pipe manufacturer.
- The maximum angular deviation in a socket joint of the piping depends on the material selected and must not exceed values permitted by relevant regulations, or EN, and the pipe manufacturer.
- For pressure piping, a protective warning foil in a colour corresponding to the particular piping type shall be always laid into the backfill. An identifying strip CYKY 2x4 mm2, enabling later location of the piping, shall be mounted to all pipes excluding steel ones, and taken into shafts and valve lids. Except this strip, also identification markers shall be laid above horizontal pipes, each 100 m in rural areas and each 50 m in urban areas.
- Ideal pipe laying, pipe bedding and backfilling adjustment, and pipe protection under roads shall be agreed upon individually for each piping type.
- The Contractor shall take into account local conditions on the construction site and quality of piping used when laying the piping compared to the proposed ideal method.

2.1.11.2. Concrete encasement of piping

The scope of sections with full or partial concrete encasement depends on the surface loading.

2.1.11.3. Adjustments around piping

For glass-reinforced plastic, stoneware, concrete, PP, PVC, PE, TLT and steel pipes, the bed and backfills must be performed consistently according to manufacturers' instructions and relevant directions for use. The grain-size of backfilling and filling materials must also comply with requirements of pipe manufacturers. Only materials, which will certainly not damage the piping and its protective layers, shall be used for backfilling.

The external piping protection must be checked before backfilling and trench filling is performed.

If sheeting is used, backfilling and filling with compaction shall be executed with the sheeting being gradually removed, i.e. backfills shall be compacted against natural ground of the trench.

2.1.11.4. Anchorage supporting blocks

For pressure piping, concrete anchorage blocks shall be constructed in places of bends, branches, and termination, securing the piping against shifting due to pressure, as specified by the piping manufacturers. Piping must be anchored also when laid in slopes – the slope

gradient at which the piping must be anchored is specified in relevant regulations and directions of manufacturers of individual pipe types.

In places where such concrete blocks may not be used due to limited space conditions or insufficient soil bearing capacity, they may be replaced with interlocking couplings secured against shifting in compliance with manufacturer's instructions and directions.

The anchorage blocks must be placed before the pressure test is performed.

2.1.11.5. Pipe joining

Piping shall be joined according to the pipes manufacturer's instructions, connecting elements corresponding to the joint types and technological regulations for the appropriate pipe material assembly shall be used.

PVC, PP, concrete, and TLT pipes shall be joined through sockets using rubber rings. For piping laid in protection pipes the Contractor must use interlocking couplings secured against shifting. If pressure piping is used under water courses, it must be joined with interlocking couplings secured against shifting.

Glass-reinforced plastic pipes shall be joined with couplings on rubber rings.

Stoneware pipes shall be joined through sockets with integrated polyurethane sealing.

Steel pipes shall be welded or connected through flange joints.

PE 100 pipes shall be butt joined, street piping with electrocast couplings and fittings. Both materials joined must have the same physical characteristics. The joints must have at least the same parameters as the pipes. In places of PE pipes changing to flange-ending pipes, a seam ring and free loose flange shall be used.

The surface of joints must be kept completely clean before and during joining.

When work is interrupted, all openings must be closed with plugs, covers or blind flanges.

2.1.11.6. Flanged joints

Flanges, sealing, joining materials used, and the joining procedure must comply with EN 1092, EN 1514, EN 1515 and with other relevant valid regulations.

All bolts and washers of flanged joints shall be made of stainless steel, nuts of brass.

All bolts, washers, and nuts of flanged joints inside structures shall be made of stainless steel.

2.1.11.7. Protection against corrosion, coatings

All pipes and fittings must be supplied with paints and coatings applied in the production plants. Inner and outer paints must comply with relevant regulations, must adhere and must not peel off. Inner coatings must not contain water soluble components or admixtures which could cause any change in water quality following a reasonable pipe rinsing.

Materials coming to contact with potable water must not contain any toxic components, must comply with relevant regulations, EN standards, legislative regulations, and must have valid certificates proving their suitability for the contact with potable water.

STRABAG AG

Protection against corrosion must comply with relevant regulations.

Pipes and fittings must be supplied to the construction site with sufficient amounts of materials enabling protective systems of welded joints to be finished on the site.

In places where required by a relevant regulation, galvanic protection against corrosion shall be applied.

Pipes and fittings must be thoroughly cleaned before their assembly, and their protection shall be applied in compliance with valid regulations.

2.1.11.8. Pipe cutting

Pipes shall be cut in compliance with manufacturer's instructions, with preventing any damage of their surface protection and providing their perfect joining.

Pipes which will be cut short during the construction, must have smooth cut perpendicular to their axis. Ends of cut-short pipes must be adjusted to a shape required for piping material assembly before they are used.

2.1.11.9. Sewer connection

Unless it is contrary to valid legislation, the following may be generally stated:

- Newly constructed sewers shall be connected in connecting shafts. Connections with smaller inner diameters up to DN 200 mm may be connected to the main sewer with fittings.
- Other sewers shall be connected to existing or newly constructed shafts. Connections with smaller inner diameters up to DN 200 mm may be connected directly to existing sewers into milled openings fitted with special sealing. The connection must be watertight so that the formal function of the sewer is not disrupted. Connection to an existing sewer system may be performed only with the system operator's approval.

2.1.11.10. Piping permissible tolerance

The permissible piping direction and height tolerance is specified in relevant regulations and depends on the piping vertical alignment and size.

2.1.11.11. Unused existing piping

Existing piping which will cease to be functional after the construction of new sewers, shall be:

- Demolished, including shafts, in places where its will be replaced with new piping in the same route. Its material shall be disposed of to a controlled landfill.
- Filled up with poor concrete or ash-cement suspension in places where it is situated outside the new piping trenches.

2.1.11.12. Parallel piping

All the above-mentions provisions apply to two piping lines running in parallel. Joint excavation works and assembly of both lines in a single trench are expected. This includes shared trench sheeting and draining, if necessary.

2.1.12. Ductile iron piping

2.1.12.1. General

Ductile iron piping for gravity applications must comply with EN 476 standard which specifies general requirements on components of gravity piping systems and sewers. Nominal inner diameters must comply with relevant regulations. All cast iron pipes, flanges, and other components of sewer systems must comply with EN 598 and ISO 2531.

All cast iron pipes, fittings, valves, and other components of water supply systems must comply with EN 545 and ISO 2531. Inner and outer surfaces protection of the piping must comply with EN 545. Nominal inner diameters must comply with relevant regulations.

2.1.12.2. Material production and quality

Ductile iron, also known as nodular cast iron, nodular-graphite cast iron, is characterised by the content of nodular graphite in resulting cast pieces. Compared to flake-graphite cast iron it has higher tensile strength, high yield limit, and high ductility. An internationally accepted value for ductile iron density is 7,050 kg/m2.

Ductile cast iron pipes must be produced by one of the following procedures:

- Centrifugal casting to metal moulds with or without lining,
- Centrifugal casting to sand moulds,
- Casting to sand moulds,
- Casting to metal moulds.

Ductile cast iron fittings and accessories must be produced by one of the following procedures:

- Casting to sand moulds,
- Casting to metal moulds.

Pipes, fittings, and accessories must be fitted with fixed or loose flanges.

Pipes and fittings may be supplied with various joint types. Pipes and fittings with socket joints sealed with elastomeric sealing rings and flanged fittings are recommended to be used.

Pipes and fittings must comply with relevant regulations and must pass all specified tests. Pipes, fittings, and accessories must not have any defects preventing their correct use.

In order to ensure changeability of supplies from various sources, plus tolerances of plain end outer diameter of pipes and fittings, if measured peripherally in the place of joining, shall not exceed 1 mm.

2.1.12.3. Protective coatings

All pipes and fittings must be supplied with coatings/paints applied in the production plants. Inner and outer paints must comply with provisions of a relevant regulation, must dry quickly and adhere, and must not peel off. Inner coatings must not contain water soluble components or admixtures which could give water any off-flavour or odour following a

D.O.O. VODOVOD I KANALIZACIJA ViK DANILOVGRAD
STRABAG AG

reasonable pipe rinsing. Inner coating of piping supplying potable water or edible liquids must not contain any toxic components.

Protection against corrosion must comply with relevant regulations.

2.1.13. Steel piping

2.1.13.1. General

Steel piping for gravity applications must comply with EN 476 standard which specifies general requirements on components of gravity piping systems and sewers. Nominal inner diameters must comply with relevant regulations.

All pipes and fittings within WWTP's, in reservoirs and pumping stations shall be made of stainless steel.

Steel pipes shall be joined by welding or through flanged joints.

2.1.13.2. Material production and quality

Pipes and fittings must comply with relevant regulations and must pass all specified tests.

Steel pipes and fittings must be manufactured in the production plant. Oblong and spiral shapes must be made by automatic submerged arc welding, except pipes with small inner diameters.

Protective coatings

All pipes and fittings must be supplied with coatings applied in the production plants. Inner and outer coatings must comply with provisions of a relevant regulation

2.1.13.3. Welding

Welding shall be performed according to provisions of relevant regulations and EN ISO 6520-1, EN ISO 6520-2, EN ISO 6947, EN ISO 9692-2, EN ISO 9692-3.

The Contractor shall submit a detailed description of the welding procedure complying with a relevant regulation. This procedure must contain all dimensions, combinations of materials to be joined, and all repair welds. The procedure shall be approved by Engineer.

All welding work must be executed by qualified welders and strictly in compliance with specified welding procedures.

2.1.13.4. Protection against corrosion

Inner and outer systems of corrosion protection must be applied in the production plants. Pipes and fittings must be supplied to the construction site with sufficient amounts of materials enabling protective systems of welded joints to be finished on the site.

Where required by a relevant regulation, galvanic protection against corrosion shall be applied.

2.1.14. Concrete and reinforced-concrete piping

2.1.14.1. General

Concrete and reinforced-concrete piping for gravity applications must comply with EN 476 standard which specifies general requirements on components of gravity piping systems and sewers. Nominal inner diameters must comply with relevant regulations. Pipes must be made of water-resistant reinforced-concrete according to a relevant regulation. Conditions for the use of concrete and reinforced-concrete pipes are specified in a relevant regulation.

2.1.14.2. Material production and quality

Unless specified otherwise, pipes must be made of water-resistant reinforced-concrete, fitted with socket joints with integrated sealing. Sealing rings must not affect the piping system and must not cause failures of testing sets. Material for sealing rings must comply with EN 681-1.

All concrete and reinforced-concrete pipes must be made from cement resistant to sulphates as specified in a relevant regulation.

All concrete and reinforced-concrete pipes must be transported, stored, handled, laid, and joined strictly in compliance with the manufacturer's instructions and recommendations.

2.1.15. Plastic piping

2.1.15.1. General

Plastic piping for gravity applications must comply with EN 476 standard which specifies general requirements on components of gravity piping systems and sewers, and with EN 13598-1 which specifies requirements on auxiliary accessories including inspection chambers. Nominal inner diameters must comply with relevant regulations.

2.1.15.2. PVC piping

PVC pipes and fittings for pressure-less usage must comply with EN 1401-1. PVC pipes and fittings of pressure systems (both water supply and sewer system) must comply with EN 1452-3. Pipes of min. PN 10 shall be used.

With the exception of flanges joints and where specified or approved by Engineer otherwise, the pipe joints must be flexible and sealed with rubber rings or sealing approved by Engineer, and must pass all specified tests.

The min. rigidity of all pipes and fittings must be SN 8 (8 kN /m2).

Sealing rings must not affect the piping system and must not cause failures of testing sets as specified in provisions of a relevant regulation. Material for sealing rings must comply with EN 681-1.

Adhesive must not have adverse effects on the properties of pipes and fittings, and must not cause leakage of the system.

<u>Joining pressure PVC piping systems:</u>

Pipes and fittings shall be joined through in-cut socket joints fitted with elastomeric sealing rings which are included in the delivery. With other piping systems they shall be connected

D.O.O. VODOVOD I KANALIZACIJA ViK DANILOVGRAD
STRABAG AG

through preassembled loose flanges made of ductile cast iron and elastomeric sealing rings of cast-iron flanged joints.

2.1.15.3. Polypropylene (PP) piping

Polypropylene pipes and fittings for pressure-less usage must comply with EN 1852-1. PP pipes and fittings of pressure systems must comply with relevant regulations. Pipes of min. PN 10 shall be used.

With the exception of flanges joints and where specified or approved by Engineer otherwise, the pipe joints must be flexible and sealed with rubber rings or sealing approved by Engineer, and must pass all specified tests.

The min. rigidity of all pipes and fittings must be SN 8 (8 kN /m2).

Sealing rings must not affect the piping system and must not cause failures of testing sets as specified in provisions of a relevant regulation. Material for sealing rings must comply with EN 681-1.

Adhesive must not have adverse effects on the properties of pipes and fittings, and must not cause leakage of the system.

Joining pressure PP piping systems:

Pipes and fittings shall be joined by thermal welding as specified in relevant regulations:

- butt welding,
- polyfusion welding.

2.1.15.4. Polyethylene (PE) piping

Pipes and fittings made of high-density polyethylene (HDPE) used for the construction of sewer systems must comply with EN 13244 (pressure applications), EN 12666 (pressure-less applications). Pipes of min. PN 10 shall be used for pressure applications.

The min. rigidity of all pipes and fittings must be SN 8 (8 kN /m2).

Joining pressure piping systems:

PE pipes and fittings shall be joined by thermal welding as specified in relevant regulations:

- butt welding,
- polyfusion welding,
- electrofusion welding

Pipes of smaller inner diameter may be joined also through mechanical fittings. PE pipes and fittings of pressure systems must not be joined with adhesives.

Pipes used for pressure supply of potable water must comply with requirements of EN 12201.

J.K.P. "VODOVOD I KANALIZACIJA" VIK DANILOVGRAD
STRABAG AG

2.1.15.5. Glass-fibre reinforced plastic (GRP) piping

Pipes and fittings made of GRP must comply with provisions of a relevant regulation and of EN 14364. Pipes of min. PN 10 shall be used for pressure applications.

The min. annular rigidity of all pipes and fittings must be SN 5,000, or 10,000 according to the pipe laying depth and loading.

Pipes must have straight faces, smooth outer surface, and constant outer diameter along their whole length, enabling them to be cut and joined in any position along the whole length without any special preparation of the cut-off face, except resealing exposed fibres. Pipes shall be joined by methods and with materials specified by their manufacturer (generally with couplings on rubber rings).

2.1.15.6. Drain pipes

Plastic pipes complying with relevant regulations shall be used, with circular cross-section, enabling continual piping of required length to be formed. Pipes walls must be perforated. Smooth, flexible or coated flexible pipes are permitted to be used.

2.1.15.7. Material quality

All pipes and fittings must be transported, stored, handled, laid, and joined strictly in compliance with the manufacturer's instructions and recommendations to prevent any damages to the material and insulation of the pipes and fittings.

The storage method of material for horizontal piping on the construction site must prevent it from being damaged or contaminated inside.

Plastic pipes must be resistant to ultraviolet radiation.

The Contractor shall inform the manufacturers on climatic conditions on the worksite and apply for instructions for storing these materials on the site. After being approved by Engineer, these instructions must always be complied with.

2.1.16. Stoneware piping

2.1.16.1. General

Stoneware piping for gravity applications must comply with EN 476 which specifies general requirements on components of gravity piping systems and sewers. Nominal inner diameters must comply with relevant regulations.

2.1.16.2. Material quality

Pipes, fittings and joints of stoneware piping must comply with the requirements of EN 295-1.

Stoneware pipes shall be joined through sockets with integrated polyurethane sealing. Joints must pass tests specified in EN 295-3. Joint water-tightness must comply with the requirements of EN 295-3.

2.1.17. Pipe laying

2.1.17.1. Concrete and reinforced-concrete pipes

Unless it is contrary to valid legislation, the following may be generally stated:

- A 100 mm thick concrete layer shall be laid under the pipes. They must be laid on supporting concrete blocks of specified size. The remaining space below the blocks and along the pipes shall be filled up with concrete. Design of the concrete bed along the piping must ensure min. 120° supporting angle. Due to this the trench sheeting must be removed gradually.
- Dolomite sand must be used for backfilling the pipes. Pipe backfilling and material compacting must be performed by layers of max. thickness 150 mm until reaching the level of 300 mm above the piping. The backfilling material shall be specified in the Contractor's design documentation, or by the manufacturer. Generally, it should be 0-8 mm fraction.
- Backfilling in unpaved areas – screened material from excavations shall be used (if usable, otherwise gravel sand 0-63 mm). Unless specified otherwise in the excavation permit, the top filling layer (approx. 35-40 cm) of minor roads shall be made of crushed gravel up to the bottom level of the road structure. Excavated soil shall be deposited in a borrow pit and brought back for trench backfilling after piping has been laid and shafts constructed.
- Backfilling under major roads shall be made according to the road operator's requirements.
- Material for backfilling and filling (if excavated soil is not used) shall be certified and shall comply with relevant regulations.
- In case of groundwater occurrence, a 100 mm thick draining gravel layer shall be spread over the whole trench width. Pits shall be drained with drain piping DN 100-150 mm laid into a sand bed (max. grain size 65 mm) along one or both sides of the trench according to a hydraulic calculation of the trench draining. The calculations shall be made by the Contractor. When not required any more, the drainage shall be closed in a way specified in the Contractor's design documentation.
- Prior to the hand-over, the Contractor shall clean all piping.

2.1.17.2. Steel and cast iron pipes

Unless it is contrary to valid legislation, the following may be generally stated:

- Only a sand material of 0-22 mm grain size may be used for the bed and pipe backfilling. The minimum thickness of bed/sub-base is 10 cm, of backfill 30 cm above the piping crest.
- Backfilling in unpaved areas – screened material from excavations shall be used (if usable, otherwise gravel sand 0-63 mm). Unless specified otherwise in the excavation permit, the top filling layer (approx. 35-40 cm) of minor roads shall be made of crushed gravel up to the bottom level of the road structure. Excavated soil shall be deposited in

D.O.O. VODOVOD I KANALIZACIJA DANILOVGRAD VIK
STRABAG AG

a borrow pit and brought back for trench backfilling after piping has been laid and shafts constructed.

- Unless specified otherwise in the excavation permit, filling under major roads shall be made with crushed gravel of 0-63 mm along the whole length.
- Material for bedding, backfilling and filling (if excavated soil is not used) shall be certified and shall comply with relevant regulations.
- When work is interrupted, all openings must be closed with plugs, covers or blind flanges.
- Prior to the trench filling, outer protection of pipes must be checked.
- Pressure piping (together with all fittings and valves) must be tested with water in compliance with relevant regulations. The trench shall be filled before the test is carried out to prevent piping from moving, with joints exposed. Supporting blocks shall be installed before the test.
- In case of groundwater occurrence, a draining gravel layer 100 mm thick shall be spread over the whole trench width. Pits shall be drained with drain piping DN 100-150 mm laid into a sand bed (max. grain size 65 mm) along one or both sides of the trench according to a hydraulic calculation of the trench draining. The calculations shall be made by the Contractor. When not required any more, the drainage shall be closed in a way specified in the Contractor's design documentation.
- Prior to the hand-over, the Contractor shall clean all piping.

2.1.17.3. PVC and PE pipes

Unless it is contrary to valid legislation, the following may be generally stated:

- Piping shall be laid on a sub-bed made of 0-22 mm aggregate, layer thickness 0.15 m, Id = 0.95. After the water-tightness test is executed, piping shall be backfilled with the same material, soil along the sides of piping and above it up 0.30 m above the pipe top shall be compacted with Id = 0.95. The trench bottom shall be levelled and stones removed before pipes are laid. The maximum thickness of compacted layers is 15 cm.
- Backfilling with compacted gravel sand up to 300 mm above the pipe top. Backfilling material grain size 0-22 mm. The maximum thickness of compacted layers is 15 cm (Id = 0.95).
- Filling from a suitable compactable material, laid in compacted layers with max. thickness of 200 mm, plain under the roadway according to the building permit, but min. 45 MPa.
- If piping is laid below the groundwater level, a layer of compacted macadam with min. thickness of 150 mm shall be laid on the foundation bottom, with drain pipes DN 100 discharging to pumping shafts or to the nearest water course, or to existing gullies. Above the compacted gravel layer, a separation geotextile of 300 g/m2 shall be laid, bent to the sides and reaching above the sub-bed material.

2.1.17.4. PP pipes

Piping must be laid in compliance with EN 1610. Individual pipes shall be laid on the sub-bed layer, with sockets turned always against the slope. The pipe body must lay on the sub-bed along its whole length. The sub-bed must be adjusted under sockets. Pipes must not be laid and joined at temperatures below 0 °C and above 25 °C.

Unless it is contrary to valid legislation, the following may be generally stated:

- Pipes shall be laid on a 0.15 mm thick sand sub-base, 0-22 mm, Id = 0.95. After the water-tightness test is executed, piping shall be backfilled with the same material, soil along the sides of piping and above it up 0.30 m above the pipe top shall be compacted with Id = 0.95. The trench bottom shall be levelled and stones removed before pipes are laid. The maximum thickness of compacted layers is 15 cm.
- Backfilling with compacted gravel sand up to 300 mm above the pipe top. Backfilling material grain size 0-22 mm. The maximum thickness of compacted layers is 15 cm (Id = 0.95).
- Filling from a suitable compactable material, laid in compacted layers with max. thickness of 200 mm, plain under the roadway according to the building permit, but min. 45 MPa.
- If piping is laid below the groundwater level, a layer of compacted macadam with min. thickness of 150 mm shall be laid on the foundation bottom, with drain pipes DN 100 discharging to pumping shafts or to the nearest water course, or to existing gullies. Above the compacted gravel layer, a separation geotextile of 300 g/m2 shall be laid, bent to the sides and reaching above the sub-bed material.

2.1.17.5. GRP pipes

Unless it is contrary to valid legislation, the following may be generally stated:

- Pipes shall be laid on a levelled sub-bed layer, with small assembly hollows dug in places of joints of individual pipes, their length shall be 3x the coupling width, depth 200 mm, width for DN 150-700 shall be 200-500 mm and for DN 800 and bigger 0.7x DN. Along the whole length, except the assembly hollows, pipes must lay on the sub-bed layer. Corresponding joining materials must be used for the piping assembly, otherwise the system tightness may not be obtained.
- A sub-base, with thickness 100 mm + 0.1 DE of the piping, made of compacted sand with max. grain size not exceeding the pipe wall thickness, shall be laid on the foundation bottom. Max. grain size of the material used may be 20 mm. Its surface must be sloped according to the longitudinal profile gradient.
- For pipes SN 10,000 in their primary zone up to 0.25 DE of the pipe laid, backfilling shall be made of compacted concrete recycled material with max. grain size not exceeding the pipe wall thickness. Max. grain size may be 20 mm. Min. compaction grade Id = 0.95.

D.O.O. "VODOVOD I KANALIZACIJA" DANILOVGRAD
STRABAG AG

- Backfilling compacted in layers max. 150 mm. Fills directly above the pipes up to 30 cm must not be compacted!
- For pipes SN 5,000 in their primary zone up to 0.70 DE of the pipe laid, backfilling shall be made of compacted gravel sand with max. grain size not exceeding the pipe wall thickness. Max. grain size may be 15 mm. Min. compaction grade Id = 0.95.
- In the secondary zone of the piping up to 300 mm above the pipe top, compacted backfilling and filling from incoherent soil with max. grain size not exceeding the pipe wall thickness shall be made. Max. grain size may be 15 mm. Fills directly above the pipes up to 30 cm must not be compacted!
- Filling from a suitable compactable material, laid in compacted layers with max. thickness of 200 mm, plain under the roadway according to the building permit, but min. 45 MPa.

2.1.17.6. Stoneware pipes

Unless it is contrary to valid legislation, the following may be generally stated:

- A 100 mm thick sub-base from C12/15 concrete shall be laid on the foundation bottom. The concrete surface must be sloped according to the longitudinal profile. Concrete blocks shall be placed on the sub-base, one piece behind each pipe socket.
- In case of groundwater occurrence, a gravel sand layer of min. 100 mm thickness shall be laid on the foundation bottom, sloped towards the draining groove.
- Pipes shall be laid in compliance with EN 1610. On the bottom layer of the concrete saddle, concrete blocks shall be placed, on which individual pipes shall be laid, with their sockets turned always against the slope. When making concrete encasement, it must be ensured that the concrete fills the space between the pipe and the block. The Contractor shall use a laser gradient meter for laying the pipes. After the gradient is checked and water-tightness test successful passed, piping shall be completely encased with C12/15 concrete up to the level 100 mm above its top.

2.1.18. Requirements on sewer systems construction

The sewerage shall be designed according to EN 752 and relevant regulations. Sewer shafts and structures shall be constructed in places of sewers connections, horizontal and vertical bends, along a straight route within max. specified distances, and in other cases required by relevant regulations. Structures (flush shafts, pumping stations and other) shall be located on the sewer system upon the technical design of the sewer system and operator's requirements. Shafts and structures shall be made of concrete (monolithic, pre-cast) or plastic. The shaft and structure constructions must be watertight. The shaft and structure locations, their construction, equipment, and other aspects are specified in relevant regulations. Piping connection to the shaft or structure walls must be watertight and made with joining sockets corresponding to the material used.

VODOVOD I KANALIZACIJA D.O.O. DANILOVGRAD VIK
STRABAG AG

2.1.18.1. Sewer system structures

Entries to shafts and structures (location of steps or ladders) must be safe and must comply with relevant regulations.

Inspection and confluent shafts must be constructed on sewerage systems and sewer piping, located according to the requirements of relevant regulations in places where profile, material or gradient changes, and in places of confluence with other piping. The shafts shall be made of concrete or plastic.

Plain concrete and reinforced-concrete shafts must comply with specifications of EN 1917. The concrete shaft construction may pre-cast, combined (partly pre-cast and partly monolithic), or monolithic cast in situ, always watertight. They must be made of water-resistant concrete according to relevant regulations.

In places, where structures shall be located below the level of concrete aggressive groundwater, concrete constructions of these structures shall be adequately protected.

Sewer piping passages through structure walls shall be made with special passage and sealing materials incorporated in the construction, which shall ensure passage water-tightness. The passage-piece material shall correspond to the material of piping leading into the shaft. For pre-cast structures, these passage-pieces shall be incorporated into pre-cast sections during their production. Additional insertion of joining sockets is not permitted.

Shaft bodies shall be laid on pre-cast or monolithic bottoms. Individual rings shall be fitted with integrated sealing supplied by their manufacturers together with the rings.

Shafts with pre-cast bottoms shall be preferred. Shafts with monolithic bottoms shall be used in places where the design sewerage shall be connected to the existing sewerage, and in confined conditions where constructing a monolithic bottom is more economical.

Shaft cunettes shall be made in a way ensuring their resistance to the sewage impact.

Joints of pipes and shaft walls must be protected against damages during different settling of the constructions.

Shafts shall be covered with lids. Lids and frames used shall comply with EN 124. Cast iron lids with specific bearing capacity shall be used in roads, concrete or composite lids with specific bearing capacity shall be used outside roads.

In unpaved areas, shafts shall end above the ground.

If a shaft composition is not specified in detail, the price shall be considered to include a complete shaft.

<u>Wastewater pumping stations – structural part</u>

Pumping stations (PS's) in the sewerage system shall be located in places from which further gravity runoff is not possible. These include:

- Sewers along which the level line runs to unacceptable depths,
- Low-located catchment area of one or more sewers,

D.O.O. VODOVOD I KANALIZACIJA VIK DANILOVGRAD
STRABAG AG

- Transport of wastewaters towards the WWTP.

If possible, PS's shall always be located within public plots outside communications. They may be located within communications only if there is no other space available. Traffic on such communications shall be restricted during repairs and replacement of pumps, or maintenance in the wet chamber of the PS.

Pumping stations shall be designed as completely underground structures made of reinforced-concrete monolithic or pre-cast watertight elements. They shall be constructed in construction pits secured with suitable sheeting. It will be the full responsibility of the Contractor to lower the groundwater level so that the PS's could be founded in dry conditions. The Contractor may choose a suitable method of the PS construction, since being fully responsible for the PS design and realisation, including the provision of work safety and health protection.

Removable covers are designed in the PS ceilings enabling the assembly and access. The covers and entries to PS's shall be designed according to relevant regulations.

Machinery equipment within PS's is included in the technological part. Each PS shall include one operational pump and one reserve pump, in exceptional cases more operational pumps. The PS operation is fully automatic depending on the level of water in the PS accumulation space; operation and breakdowns of pumps are signalled via remote transmission to the WWTP Danilovgrad control room.

Pumping stations within the sewerage system are divided to two categories:

PS of category 1 – wet chamber without backflow valves.

From each pump in the PS wet chamber, separate delivery leads to an inspection shaft down the lower located sewer section. Delivery piping is without valves and fittings.

PS of category 2 – wet chamber with backflow valves.

Wastewater runs through one delivery piping to a gravity section of another catchment area. The pump delivery includes backflow valves and valves with a surface box assembly. Behind the valves the piping joins into a common delivery.

<u>Switchboard for pumping stations – structural part</u>

Unless it is contrary to valid legislation, the following may be generally stated:

- A metering switchboard shall be made in the form of a white-brick pillar 600x1000 mm, 1950 mm high, standing inside a fenced-off PS complex or close to an unfenced-off PS.
- A technological switchboard shall be made in the form of a white-brick pillar 600x1800 mm, 1950 mm high, standing inside a fenced-off PS complex or close to an unfenced-off PS. This switchboard may be located also in a dry underground concrete shaft in the PS vicinity. Five pieces of plastic protection pipes DN 75 shall be laid between the switchboard and the PS.

VIK DOO VODOVOD I KANALIZACIJA DANILOVGRAD
STRABAG AG

- If compact PS's are supplied, both switchboards may be included in the technological delivery and located inside a PS type container.

2.1.19. Road works

2.1.19.1. Removing bituminous surfaces

If the works include removal of bituminous surfaces of existing communications for the purpose of excavating trenches or pits, the tenderer shall be considered to have included the price of cutting (or repeated cutting, if necessary) and removing of bitumen (in major roads by milling) and base layers of the roadway, vertical and horizontal transport of debris to a landfill as specified in valid legislation.

2.1.19.2. Earth works

Earth works must be executed in compliance with Chapter 2.1.6 "Earth works" of these specifications. The formation is determined by the project and a relevant regulation.

2.1.19.3. Road-bed surfacing and protection

After the road-bed is compacted to the required degree, its surface must be parallel with the finished roadway surface.

The finished road-bed surface must be approved by Engineer before base layers are laid. After final compaction and approval the road-bed must be protected and drained.

No materials or equipment may be stored on the finished surface. Without the Engineer's approval no vehicles may travel over the finished road-bed. At his own expenses, the Contractor must repair all insufficiently compacted or impaired parts of the road-bed.

2.1.19.4. Material and construction of base layers

Constructions shall be realised according to the project and relevant regulations.

Aggregate used in base layers must comply with the requirements of EN 13242. All material must be laid, evenly spread and compacted (spreading performed simultaneously with laying). This material must be lain in one or more layers so that the required base thickness is obtained. The base compaction must comply with a relevant regulation and must be made as soon as possible after the material has been spread.

The base must be maintained and drained during the construction to prevent the formation of a continuous layer on its surface. Water must be drained from the base to prevent its erosion.

2.1.19.5. Cover layers

Constructions shall be realised according to the project and relevant regulations.

Bituminous layers may be laid only on a dry base and in dry weather. Preparation, transport, laying, compacting, and curing of the surface must be executed in compliance with relevant regulations.

The works include reinstallation of horizontal traffic marking in sections affected by the construction.

2.1.19.6. Kerbs and pavements

Communications for pedestrians shall be realised according to the project and relevant regulations. Impaired pavements shall be repaired after the construction over the trench or pit width. Existing pavements shall be restored to their original conditions including all base layers.

2.1.19.7. Repairs of major roads

Unless specified otherwise in the building and excavation permits, structural layers of roads shall be repaired over the trench/pit width. Exact thickness shall be determined upon local conditions, requirements of relevant authorities, and specification in the Main design.

Principles and technological procedures of road repairs:

When situating sewers in communications, it is important to observe basic principles in order to prevent the occurrence of defects in roads due to infringements of the technological discipline. These principles shall be elaborated in the design documentation; the Contractor must observe, continuously monitor and evaluate them according to actual situation on the construction site. Engineer must permanently cooperate with the Contractor on the site, focusing on the work quality. The maximum homogeneity must be reached upon the construction termination, as the only guarantee of the minimisation of later deformations.

No work in roads may be started before a lawful permit issued by relevant road and transport authorities is obtained within the meaning of valid legislation.

When sewerage is constructed in a bituminous road, bonded layers shall be cut through and removed across the future excavation width. The trench excavation must be executed in compliance with relevant regulations and related legal and safety rules.

The basic aspect of the work quality in all alternatives is the execution of backfills of trenches up to the piping, which shall be executed in compliance with valid regulations. Backfilling shall be executed according to the Main design and technological procedure elaborated by the Contractor and approved by Engineer. An approved, compactable loose material (gravel sand, recycled material) shall be used, compacted in layers. The compacted soil moisture must not differ from the optimal moisture value. Thickness of layers laid shall be adjusted to the compacting machinery used, trench width, and material compactable qualities.

Backfilling must be performed along both sides of a structure simultaneously in order to prevent uneven pressures. When compacting is executed close to a structure or its parts, piping must be prevented from buckling or damaging, and insulation from damaging. Sheeting and other auxiliary equipment must be removed before backfilling is made.

Trench excavations shall be filled over their whole width after piping has been laid and relevant tests, approved by Engineer, performed. It is necessary to respect pipe manufacturer's technical conditions for pipe laying, and static assessment of the designed laying method, depending on loading and geological conditions.

Specified compaction grade must be observed within the whole thickness. The minimum deformation modulus value, determined by a relevant regulation, must be reached on the plain (the upper level of a mound). A technological procedure must be specified for the mound formation and the mound must be formed under an expert supervision. Relevant regulations shall be observed during the mound designing, forming, checking, and accepting.

During the backfill execution, regular tests specified in a relevant regulation must be performed continuously (i.e. on individual layers of the fill).

After backfills are made up to the plain level, the roadway structure shall be constructed. First the structure must be made in the trench. The basic principle is to build the structure in the same composition as the existing structure is, with individual layers bound to each other to ensure their co-action and functionality. Vertical connection to the existing structure cover must be properly sealed (joint sealers, torch-on strips). The final coating of the cover may be executed only after complete consolidation of the trench backfill.

2.1.19.8. Repairs of local roads

The repair of impaired local roads and pavements after the construction of sanitary sewers, branches for house connections, water supply mains, and other related structures and investments (re-laid utility lines) shall be executed over the trench width.

Prior to the earth works commencement, bitumen-concrete and concrete cover of roads shall be cut within the trench width and removed. In roads and pavements covered with road panels, these shall be removed from the trench or pit space. The panels shall be used for later repairs. Impaired panels must be replaced with new ones by the Contractor.

After all works on sewer systems, water supply mains, and related structures are finished, structural layers of roads, including their covers, shall be repaired. Communications shall be restored to their original height level. Backfills, structural layers, and bitumen-concrete cover of local communications must be constructed according to principles and technological procedures described in the previous chapter.

Impaired pavements and other hard-surfaces as well as unpaved areas shall be restored to their original conditions.

Exact thickness shall be determined upon local conditions, requirements of relevant authorities, and specification in the Main design.

2.1.19.9. Tests of finished road layers

Acceptance tests of finished layers of structural elements of roads, pavements, and hard-surface areas shall comply with relevant regulations.

2.1.20. Fencing and landscaping

2.1.20.1. Fences and gates

Fences and gates shall comply with relevant regulations.

2.1.20.2. Landscaping

Where required, landscaping of the construction site must be performed after the Contractor has finished all other earth works except topsoil transfer. The areas in question must be levelled to the terrain level minus the layer thickness required for the topsoil or any other finish, and all excessive material must be removed from the site to an approved landfill.

Existing topsoil removed from the site and deposited nearby may be reused, provided it has not been contaminated and contains no building rubble and other impurities.

All unpaved areas shall be seeded with grass by the Contractor.

If there is not a sufficient quantity of topsoil from the site, the Contractor shall haul in a necessary quantity of humus at his own expenses. Prior to the landscaping commencement, its samples must be submitted to Engineer for approval.

The grass mix may be formed by various types proposed by the Contractor and approved by Engineer. Unless specified otherwise, all newly planted vegetation (bushes, trees) as well as seeded grass must be looked after (mowed) for one year.

2.1.21. Crossing with lines, roads, railways and water courses

2.1.21.1. Crossing railways

The construction must not endanger the railway transport continuity and safety. During the construction, the trackbed stability and drainage must not be endangered. Clear-sight conditions along the railway track shall be permanently maintained.

Construction within the perimeter of the railway and its protection zone may be executed only upon a design documentation verified in administrative proceedings and in compliance with valid regulations and railway regulations. Eventual changes in the construction may not be executed without a previous approval of an authorised body.

For crossing with a route of both local and long-distance railway cables, provisions of relevant regulations must be observed. Prior to the work commencement, exact marking-out of underground lines must be applied for. Excavation works within a specified radius from these line must be performed manually with the presence of a relevant person who shall evaluate the line conditions and observation of crossing conditions before the execute route is backfilled.

Relevant authorities shall join the final inspection proceedings after the construction is finished.

2.1.21.2. Crossing with major roads

In places where the designed piping crosses both intact lanes of a major road and where it is allowed by geological conditions, trenchless technology shall be used, e.g. push-broaching or micro-tunnelling.

Places of crossing with major roads shall be marked with boards installed next to the road bearing the sign "ATTENTION – NO EXCAVATION".

D.O.O. VODOVOD I KANALIZACIJA VIK DANILOVGRAD
STRABAG AG

2.1.21.3. Crossing with local roads

Crossing with local roads shall be executed in compliance with issued permits. Unless it is question by a relevant permit, it is recommended to perform the crossing perpendicularly by digging in two stages in order to keep one lane functional at all times. Temporary finish of the road shall be made immediately after the piping is laid. The final finish of the road shall be made within one year. Composition according to the building permit. The location of the piping designed shall respect the requirements of relevant regulations.

2.1.21.4. Crossing with water courses

For crossing with water courses, the Contractor is obliged to minimise impacts on the stream beds and bank vegetation and execute the work in suitable times.

After the trench is backfilled, the river bed shall be restored to its original condition and stabilised. The following stabilisation of the river banks and bed shall be executed in compliance with the course operator's requirements. Excessive soil shall be taken to a temporary dumping site.

Places of crossing with water courses shall be marked with boards installed on the bank bearing the sign "ATTENTION – NO EXCAVATION".

Unless it is contrary to valid legislation, it may be generally stated that crossing with water courses shall be executed according to the river bed width in the following way:

- River bed width up to 5 m: The water course shall be dam up with dykes and water diverted by pumping around the dykes. Soil from trench excavations shall be used for the dykes.
- River bed width from 5 to 12~15 m: The water course shall be dam up with dykes and water diverted through the site in DN 500 steel pipe by pumping. The dykes shall be constructed with soil from trench excavations, and if necessary also from an intermediate dumping site.
- River bed width over 12~15 m: The construction shall be executed in two stages – in one half of the water course protected with dykes with water diverted to the other half. After piping is laid in the first half, the dykes shall be transferred and pipe laying performed in the other half of the water course. The dykes shall be constructed with soil from trench excavations, and if necessary also with suitable soil brought from an intermediate dumping site.

For crossing with water courses, the Contractor may use also other procedures or technologies (e.g. push-broaching), if approved in writing by Engineer. In such cases the Contractor must document the planned method of the work execution and submit it to Engineer and the course operator for approval. However, the method proposed by the Contractor may not lead to the increase of the tender price.

<u>Laying pipes on a bridge structure</u>

In places where laying delivery piping under the water course bed is not technically possible, the crossing shall be executed "in air", either by suspending the piping on an existing bridge

D.O.O. VODOVOD I KANALIZACIJA ViK DANILOVGRAD
STRABAG AG

structure (if approved by the bridge owner), or on a separate pipeline bridge. Delivery piping shall be insulated (or pre-insulated pipes shall be used), and an automatic air valve shall be installed in the highest point.

2.1.21.5. Crossing with gas lines

Special attention shall be paid to parallel running with and crossing gas lines. The following general principles apply:

- Protection and safety zones of the gas lines according to the minimum distance must be kept in compliance with relevant regulations.
- Designs for crossing with gas lines shall be executed in compliance with the provision of relevant regulations and verified by a relevant authority.
- The minimum distance of sewer and water supply piping from a gas line in place of crossing must comply with the relevant regulations.
- Existing gas facilities must be marked-out accurately before the construction commencement.
- Work within the gas facility protection zone, as specified in relevant regulations, may be executed by physical or legal persons only with the approval of the line operator in compliance with the operator's conditions specified and under the supervision of the operator's representative.
- During exposure, before backfilling and filling the route, a representative of the line operator must be invited to inspect the work execution. Results of these inspections shall be recorded in the building log of a separate report on each crossing shall be elaborated.
- If insulation is damaged or a breakdown occurs, the Contractor is obliged to issue an order to a relevant operator's office, the breakdown may be repaired only by the operator's personnel.

2.1.21.6. Crossing with utility lines

Prior to staring any excavation works and their designing (if necessary), the Contractor shall contact all relevant statutory institutions, road operator, and other owners of individual facilities. The Contractor shall check the exact position of existing facilities which could affect the construction works or be affected by them.

In cases of crossing with utility lines the Contractor shall proceed according to the opinions and conditions of individual operators of these lines, submitted during the building permit proceedings (the duty of line identification, handing-over the lines before backfilling, and other relevant opinions). The Contractor shall seek also other lines which were not the subject of the design documentation due to insufficient documents submitted by operators.

The Contractor shall inform Engineer in advance on every re-laying of a facility required due to his needs or due to the proposed working procedure. At the same time, the Contractor shall observe all Engineer's requirements related to such re-laying. The Contractor shall be

D.O.O. VODOVOD I KANALIZACIJA DANILOVGRAD VIK
STRABAG AG

responsible for the realisation of his own measures necessary for re-laying or removing utility lines.

The Contractor shall keep records in drawings related to all lines and facilities collided with, and mark all differences concerning information provided by statutory institutions to the road operator. These records shall be submitted to Engineer.

Information on facilities provided by relevant institutions shall be available in common working hours. During the contract validity period, the Contractor shall be responsible for determining exact locations of individual notified facilities operated by relevant institutions, including utility lines and connections. Their location shall be determined upon consultations with relevant authorities, equipment for electromagnetic survey shall be used, and survey through dug boreholes shall be executed.

Special attention shall be paid to those facilities, utility lines and connections, that were notified but are not marked in relevant drawings of individual operators, such as pipe gates and immovable assets operated from facilities notified. The Contractor shall bear all expenses on the repair of facilities operated by relevant institutions, including utility lines and connections, damaged by him during the dug borehole execution or due to unsuccessful search for exact locations before construction work commencement. The Employer shall not be responsible for any delay or consequential expenses incurred by such damages.

It is assumed that all dug boreholes executed to check the location of existing utility lines, including those informed about by Engineer, shall be included in the tender price. Unless specified otherwise, the dug boreholes shall be executed manually. Further it is assumed that excavation work made complicated due to existing utility lines are included in the tender price, too.

The Contractor shall submit to Engineer detailed information on encounters with such facilities before commencing works.

The Contractor shall take all necessary measures for the compete protection of all facilities and provide all means and help to authorised representatives of relevant institutions for accessing his facilities.

All marking paints used for temporary marking of utility lines shall have a short lifetime, shall be lead-free, biodegradable, and specified as paints which shall disappear in normal operation within 10 weeks.

2.1.21.7. Crossing with forest paths

Pipe laying on forest-type plots requires special attention in terms of the piping protection against loading from heavy machinery. Piping laid on such plots requires protection against damage caused by heavy logging and transporting mechanisms utilised in logging.

The plots shall be re-cultivated and returned to their owners for further usage after the work termination.

2.1.22. Work and operations of temporary character

2.1.22.1. Emergency potable water supply for inhabitants

As specified in relevant regulations, if water supply is interrupted or limited, the operator is entitled to determine conditions of such interruption or limitation and is obliged to provide alternative supply of potable water to inhabitants or alternative wastewater collection, by a method agreed upon with the public water supply system owner within technical limits and local conditions or determined in the operational order of the public water supply system.

Interruptions of potable water supply from existing public water systems are expected during the construction of water supply and sewer systems.

The operator is obliged, as specified in relevant regulation, to inform consumers on the limitation or interruption of potable water supply from the public water systems, with the duration of such limitation or interruption. On this account, the Contractor is obliged, before every planned interruption, to inform the operator about this fact in writing.

Since the operator is obliged, as specified in relevant regulation, to remove the cause of water supply interruption or limitation without delay, and re-establish the water supply or wastewater collection without delay, the Contractor is obliged to execute all necessary works in the shortest period possible.

2.1.22.2. Temporary roads and diversions

The Contractor's execution includes restoring all structures, facilities, surfaces, areas (including access roads) affected by the construction to their original conditions. The Contractor shall include these works into his bid, together with expenses related to activities in protection zones of utility lines.

The Contractor shall prepare a methodical plan for temporary works executed during the construction. This will be especially important for the reconstruction and sealing of sewers realised during normal operation of the sewer system. The plan shall be submitted to Engineer for approval.

If the work technology requires complete road closing, the Contractor shall execute the closing for the minimum period, in morning hours if possible, after obtaining approvals from Engineer and the road operator.

Should a complete closing for a period longer than approved by Engineer and road operator occur, the Contractor shall ensure a diversion of the closed communication. If the diversion leads over unpaved surfaces, the Contractor is obliged to adjust the route so that it could be used by passenger cars and vehicles for waste collection, ambulance and fire vehicles. Road panels shall be used for this purpose. For muddy terrain, the Contractor is obliged to provide a suitable sub-base (e.g. gravel sand) below the road panels.

All expenses related to expected diversions of any kind shall be included in the tender price.

One lane shall always be kept open for traffic in major roads, unless specified otherwise in the Employer's requirements. The minimum width of one lane is 2.75 m. If this minimum

width of a single lane on an existing roadway structure is not ensured, the Contractor must, at this own expenses, widen the lane with the use of road panels.

Where one-way traffic is necessary, or where traffic is required to be directed from one side of the roadway to the other, the Contractor must provide an appropriate traffic control system incl. traffic lights. This traffic control system shall be submitted in the form of a traffic control plan to Engineer and relevant traffic authority for assessment and approval. The plan shall include detailed information on the length of the roadway section to be affected by the construction, and on the traffic control method during the work execution. No work may be commenced before a written approval of such system operation is obtained from the relevant traffic authority.

2.2. GENERAL REQUIREMENTS – MECHANICAL AND ELECTRICAL PART

2.2.1. Introduction

General specifications stated in this section comprise a part of the Contract for Work, requirements on contractor's design documents and on construction of the work. Employer's requirements on construction, machine & technological and electrotechnical works complement and specify general requirements. In the case that a measure is missing in Employer's requirements, measures listed in general requirements shall apply. In potential discrepancy of general requirement measures and Employer's requirement measures, measures stated in Employer's requirements shall apply.

2.2.2. General

The Contractor is responsible for the draft and complete designing of machines and machine and electrotechnical equipment of the construction. Machine & technological and electrotechnical works included in the Contract comprise elaboration of complete design documentation of all stages, preliminaries for working drawings (as required), manufacturing, factory testing, transportation to construction site, installation, individual and complex testing including testing operation of the whole work and its approval and acceptance.

It is Contractor's responsibility that the draft, manufacturing and functions of machine and electrotechnical equipment allows to achieve the required outlet parameters defined by permissions for water using and other parameters stated in technical specifications. All supplied equipment is to be new. The designed equipment must comply with standards of the remaining facilities, service agreements and Employer's spare parts otherwise the Employer is entitled to require change of the equipment type suggested by the contractor at the contractor's expense.

Main requirements on the equipment to be supplied are included in Employer's requirements and specifications of the tender documents. However, the contractor shall include in their price all additional and related auxiliary items required for effective implementation of the work regardless whether they are specified or not.

Machines and equipment shall be complete with electric motors and all accessories and shall be newly manufactured. They shall contain all shafts, couplings, bearings, covers, pipe valves, pressure gauges, cover plates and frames, anchor screws and bolts, oilers, grease nipples and lubricators, distribution boxes, control devices, as well as all apparatuses, accessories and connections comprising complete and perfect machine & technological and electrotechnical equipment.

Price of the items shall include delivery, assembly and testing up to the level of complete tests; the price shall further include procedures required to maintain water supplies in operation as e.g. temporal connection of the existing equipment. When connecting new equipment, the process must not be interrupted and should be done in minimum time even though the works were carried out in three-shift operation in order to minimize the downtime.

2.2.2.1. Standards

Generally

The design works and the Contractor's documents shall comply with the technical standards BS, BS:CP, and DIN, building, construction and environmental Laws applicable to the works, or defined by the applicable Decree No. 22/02 (Sl. List RCG) of Montenegro (Pravilnik o načinu izrade i sadržini tehničke dokumentacije).

If necessary equivalent National Standards may be substituted for the Standards referred to in the Specifications provided, the Contractor shall have justified such substitution to the Engineer and only after written approval has been received from the Engineer.

Electrical equipment

Used materials and the design of construction parts as well as the final supplied equipment shall comply with valid Montenegro standards, ENs and ISO or with specifications of CENELEC. The standard with the most strict requirements shall be the binding one.

Some types of products (e.g. modems) shall follow the regulations of the Agency for Electronic Communications and Postal Services – Montenegro.

All telecommunication works shall be carried out by personnel in possession of a valid licence issued by the relevant authority which permit the Contractor to carry out work on low voltage equipment and cabling.

All electric equipment shall be approved by relevant authorities.

2.2.2.2. Workmanship

Particular attention shall be paid to the design of mechanic and electric installations and their arrangement which shall be approved by Engineer before the installation commences.

All machines and mechanic and electric equipment and its final location within the buildings and structures shall be agreed with Engineer at construction site before installation.

The Contractor shall arrange for the switchboard and panel manufacturers to provide skilled labour for supervision of unloading, placing in prescribed positions on prepared foundations, erection and commissioning of all switchboards and control panels.

2.2.2.3. Selection of Materials

All machines, equipment and materials that shall be permanently incorporated in the work shall be new and of first class quality, of the latest type, not used before, shall have all design and material innovations, suitable for the duty concerned, they shall be free from imperfections and with guaranteed long life and minimum maintenance.

The use of dissimilar materials in contact shall be avoided. Where unavoidable, these materials shall be selected so that the natural potential difference between them does not exceed 250 millivolts. Electro-plating or other treatment of contact surfaces shall be employed as necessary to reduce the potential difference to the desired limit.

All materials and material finishes shall be selected for long life under the climatic conditions at the site. Materials used in ventilated or air-conditioned areas shall be selected to allow for the conditions expected in the case of failure of the ventilation or air-conditioning equipment.

Tropical grade materials and panel components shall be used wherever possible.

Before the works commence, the contractor shall submit Engineer list of material sources for executed works. The list can be changed or completed in course of the works if approved by Engineer.

If a specific product is listed within this specification it shall only serve as an example and can be replaced by an equal one.

Outdoor equipment shall be able to resist climatic conditions and shall be constructed in such a way as to prevent water impounding in any point. Metal-to-metal connections shall not be allowed and all external bolts and screws shall be equipped by blank tapped holes if the through hole might allow moisture penetration. Where required, anti-climatic covers shall be provided to protect the equipment, devices and cables against weather conditions and direct sunlight.

Mechanics shall be constructed from materials that will not choke due to rust, corrosion or dust. Uncovered bearings of operational shafts shall be constructed as to prevent moisture and dust inward penetration along the shaft.

Before materials and equipment are incorporated to the work, the Contractor is obliged to submit certificates of all these materials and equipment to Engineer for approval before the planned commencement of works on the involved part of the work. For all materials that shall be in contact with potable water, the Contractor shall submit valid certificates proving that the materials can be in contact with potable water. The certificates shall be issued by accredited testing institution and shall be valid at the time of work implementation.

2.2.2.4. Conditions of the Environment

All machines, mechanical and electric equipment, cables and wiring shall be suitable to the proposed indoor environment or outdoor climatic conditions in accordance with relevant standards.

Construction parts shall be suitable for conditions common in reservoirs, pumping stations and metering shafts. It especially applies to resistance to corrosion of individual parts of the equipment that are in contact with water, sprinkling water, very humid air and other corrosive media.

The facilities may be exposed to snow and temperatures down to -20 °C during winter. That is why maximum resistance to climatic conditions shall be taken into account when selecting materials and types of structures for all outdoor facilities.

Especially when plastic material is used, strong emphasis shall be placed on their impact resistance also at low temperature. Facilities installed outdoors shall be designed with respect to increases in temperature, dilatation effects, tensions, resistance to UV-radiation caused by sun radiation etc. Maximum temperature for dimensioning shall respect maximum ambient temperature and the maximum temperature of the media.

2.2.2.5. Storing Machine and Electrotechnical Equipment on Construction Site

Engineer hall approve the dates of machine equipment delivery in collaboration with the Contractor not less than 2 weeks before the planned date of delivery to the construction site. The equipment shall be temporarily stored until the date of installation in a properly secured storage facility on the construction site.

In case of delay of construction work schedule without the delay of machine equipment delivery or in case of deteriorating state of machine equipment stored on the construction site, the contractor shall either:

1) appropriately pack all items of machine equipment as to allow storing of the machine equipment in an outdoor area within the construction site without any deterioration of its state, or
2) provide a store house within the construction site approved by Engineer and meeting the minimum requirements on the equipment protection:

- Electrotechnical equipment: roofed, slightly heated dust-proof area without dust and pests.
- Rotating machine equipment: roofed area.
- Pipes, valves, steel structures etc.: covered by tilt on open, hard surface.

Materials shall be stored as prescribed by manufacturers or appropriate regulations. Different kinds of materials shall be stored separately in order to avoid their substitution. Material that was deteriorated by unsuitable storing or treatment or whose expire date had passed may not be used in the construction and has to be removed at the Contractor's expense.

The Contractor shall ensure insurance and shall be fully and exclusively responsible for security of all delivered equipment stored on the construction site until the construction is completed.

The Contractor shall be responsible for inspection of all equipment before its storing and shall ensure that all damaged equipment is repaired before it is deposited in storage facilities.

The Contractor shall transport machine and electrotechnical equipment from the storage facility to the place of installation after receiving the instructions from Engineer and in compliance with approved schedule of works.

The Contractor shall be responsible for operation, safe maintenance and servicing of all equipment on the construction site during construction and up to the moment when the Acceptance Report is issued.

2.2.2.6. Tools and Lubricants

The Contractor shall deliver the Employer the following tools in lockers: three sets of steel spanners (one set of open-end spanners and one set of ring spanners to mount all nuts on the machine equipment) including the anchor bolts and connections and other tools of special nature needed for general maintenance, including three pressure grease dose for each type/class of lubricants.

The tools of special nature include one set of puller for all bearings and tools for mounting new bearings, three sets of screw drivers for all types of screws used on machine equipment as well as three sets of general tools.

The above sets of tools shall be approved by Engineer.

2.2.2.7. Spare Parts

The Contractor is obliged to supply spare parts for all equipments during the whole warranty period. All costs related to purchase, transport, storing and use of spare parts shall be included in the Tender Price.

At the end of the warranty period, the Contractor is obliged to hand over spare parts within the scope defined in the other parts of this Tender document to Employer.

The contractor is not obliged to supply spare parts for equipments after the warranty period expires, with the exception of parts comprising a part of standard delivery of machines and equipment.

2.2.2.8. Service Conditions

The offer shall include listed service conditions for the drafted machine equipment. All machine and electrotechnical equipment shall be designed, delivered and assembled with the proviso that under the service conditions faults can be detected and repaired within 48 hours at this equipment. If the above proviso is not proved for a specific type of equipment that the contractor wants to deliver, the Employer shall have the right to repudiate the service contract.

2.2.3. Electrotechnical equipment

2.2.3.1. Power Supply

Electric power distribution and related equipment in the distribution system shall be offered in appropriate dimensions corresponding with machines and equipment (according to their energy demands).

It shall be Contractor's duty to ensure the power required in course of the construction. The construction works shall be supplied by the same voltage as inscribed on the equipment identification plates.

Design of Power Supply System

Should the Contractor be responsible for the design or modification of power supply system, they shall observe the following general requirements.

The Contractor shall provide Engineer details of their proposals/modification for power system design and development and shall ensure all necessary leads and feeders in their plant to meet future requirements and maintain the existing operation during the transitional period.

The Contractor shall conform with specified design concept of the power distribution system and shall provide switchboards, transformers, panel boards and protection devices as required by the electrical capacity of the equipment.

D.O.O. VODOVOD I KANALIZACIJA VIK DANILOVGRAD
STRABAG AG

The Contractor shall design the electrical power system to suit nominal ratings and load duties of the equipment and auxiliary systems they propose together with the following additional design criteria.

System Reliability

The distribution system shall be such as to provide maximum security of supplies and flexibility of operation. Power feeder circuits shall be duplicated throughout to all main machine equipment installations and shall be rated for maximum simultaneous load of all operation devices of the machine equipment with exception of those for which specified control systems otherwise limit their maximum circuit loads.

Interlocking shall be provided on all switchgear feeder circuits throughout the power system to avoid parallel operation of the duplicated permanent power supplies.

Automatic standby generation shall support all critical technological processes of the equipment in the event of voltage loss or failure of the main electrical power supply.

Maximum Work Loads

The Contractor shall submit their assessment of the total installed and the maximum work load based on the offered equipment during the design phase of the Contract.

Used Voltage Systems

Power distribution system shall operate at the following voltages:

Function	Voltage
LV Distribution	3 x 400V AC
Auxiliary equipment and services	400/230V AC
Control voltage	24V DC (PLC) in general, and 24V AC (for lamps in control cabinets)

Sub-distribution at LV shall be three phase, 50 Hz. The power system shall be rigidly earthed by HV/LV transformers.

Power Supply System and Machine Equipment Protection

The specification details minimum technical requirements on the voltage and machine equipment protection.

The Contractor shall design the power supply and equipment protection systems within the specified design parameters and shall select auxiliary protection transformer ratings, ratios and protection relays with adjustable settings and operating characteristics to provide:

- Overload protection to match thermal characteristics of the machine equipment.
- Effective protection against overload, short circuit, earth fault conditions and single phase operating conditions on motor circuits.
- Distinguishable operation between relays, high-performance fuses (HRC) and circuit breaker on progressive feeders and operation stable zoned and balanced current protection systems in the case of failure and switch shock.

The Contractor shall ensure that protection of power supply systems of water treatment plants, reservoirs, waste water treatment plant and pumping stations is fully co-ordinated with the Power Supply Authority (PSA) and shall establish all protections for the whole equipment required on the HV incoming feeder circuits.

In order to protect the system against damage or destroying by overload, appropriate safety measures shall be taken into account. The system must be implemented in compliance with electrotechnical regulations relevant to current protection at all objects. Sensitive devices (electronics, PLCs, PCs etc.) shall be protected by respective systems against excess current.

Measuring of Power Consumption

Electric meters measuring consumed kWh shall be installed on the incoming feeder circuits of all HV and LV switchboards, motor switchboards and within the power supply system.

The incoming power supply measuring facilities shall comprise dedicated current and voltage transformers with 240 V voltage on secondary circuits together with multifunctional electric meters measuring kWh, kVAh, kW, kVA and offering maximum demand functions and display units provided with output analogue and voltage-free digital signal devices for remote monitoring purposes.

Power Factor Correction

In order to comply with the local distribution company requirements, the power system shall be designed to operate at a minimum required demand power factor. Power factor correction shall comply with Employer's requirements and shall comprise power factor capacitors for power factor correction provided for each motor drive and for each inductive circuit, or central automatic correction control shall be installed.

The corrected power factor of the power supply system shall have the value of 0.95 at the point of power supply and in LV distribution switchboards.

The demand power factor shall be measured and identified at each distribution switchboard within the power system.

In LV distribution system power factor correction capacitors shall be incorporated within the respective motor control or distribution switchgear.

2.2.3.2. Polarity

Polarity of all specified electric devices shall be arranged as follows (when viewed from the front):

- For two pole equipments, the phase or live pole shall be atop (or on left hand side) and the neutral or grounded pole at the bottom (or on right hand side). On plug and socket outlets, the polarity shall conform the relevant Montenegro standards.
- For three or four pole equipments the phases shall be ordered L1, L2, L3 and neutral reading from top to bottom or from left to right in the case of vertical and horizontal layouts respectively.

- Phase colours and sequence shall conform the relevant Montenegro standards. All cable cores shall be identified with phase references.

2.2.3.3. Safety Interlocks

Complete system of electric and mechanical interlocks and safety devices shall be provided throughout the whole electric installation for safe and continuous operation of the equipment in order to ensure:

- Safety of personnel engaged in operation and maintenance of the equipment.
- Correct sequence of operation of the equipment during its start up and shut down.
- Safety of the equipment when operating under normal or emergency conditions.
- Interlocks shall be preventive, not corrective in operation.

The Contractor shall be responsible for preparing interlocking schemes for Engineer's approval.

2.2.3.4. Electric Motors

Unless otherwise stated in Employer's requirements, all motors shall be suitable for operation at 400 Volts, 3 phase, 50 Hz supply and shall comply with requirements of relevant standards.

Unless otherwise specified, motor frames for indoor use shall conform to protection not lower than IP54, motor frames for outdoor use shall conform to protection not lower than IP55.

Unless otherwise stated, motor frames for submersible pumps shall conform to a degree of protection not lower than IP68.

All motors except for submersible pumps shall be suitable for operation in climatic conditions of the site and in ambient temperature up to +50°C and down to -20°C.

Motors at 50°C of ambient temperature shall be of the squirrel cage induction type suitable for direct–on–line starting while starting current shall not exceeding 6 times full load current unless specifically detailed in relevant standards as an alternative arrangement.

The efficiency and power factor of the motors shall be high over a wide range of load conditions and the motors shall be designed, manufactured and tested in accordance with relevant standards.

Motors shall be commercially silent in operation and run free from vibration. The rotors shall be balanced both statically and dynamically.

Arrangements shall be made with the manufacturer so that the Engineer may witness motor tests if so desired.

2.2.3.5. Frequency Converters

The converters unit shall provide variable voltage/frequency supply to pump sets and other regulated devices over the whole duty range. The converter itself shall be built into an enclosure that meets IP2X unless otherwise stated.

Size of aberration of the output wave from a pure sine curve shall enable any motor to be continuously operated to at 100% of its rated output when supplied by three-phase current at 400V.

Each frequency converter shall be fitted with an input filter (class A), DC choke (if not supplied with the drive) and output dU/dt filter. The printed circuit boards shall be varnished.

Display

Menu with alphanumeric text for programming and operational display of the converter shall be provided.

Display options

Nominal value (%), motor frequency (Hz), actual value (%), motor current (A), torque moment (%), motor power (kW), energy consumption (kWh), motor voltage (V), direct-current voltage (V), motor protection (%).

Storing the parameters

Storing all parameters of frequency converter during power supply failure for a period of min. 100 hours (e.g. by means of EPROM).

Minimum requirements

Upper and lower limitation of the number of revolutions, ramp functions.

Protective functions

Motor protection (possibility to connect thermistor motor protection), proof coil to avoid exceeding of the voltage higher than 800 V/s, resistant to short circuits and earthing, over-current protection, thermal protection of the frequency converter, over- and under-voltage control.

Switching-over at the output between the motor and the frequency converter shall be possible without limitation, with no danger to the frequency converter (if not stated otherwise).

2.2.3.6. Transformers

General

Power transformers 25 kVA and above for installation outdoors shall be oil immersed and naturally cooled. Unless otherwise specified, power transformers for installation indoors shall be of cast resin type. When oil filled transformers are used indoors, they shall only be installed at ground level.

Rated power

Transformers shall be sized for continuous operation at the maximum rating under the specified ambient conditions. Allowance shall be made for ideal load distribution and ideal (sine) flow of current and voltage for higher harmonics where non linear loads (i.e. converters) are connected.

J.K.P. VODOVOD I KANALIZACIJA VIK DANILOVGRAD
STRABAG AG

Winding

Primary windings of all transformers shall be closed delta connected. Secondary windings of all transformers, except for special applications such as 12 pulse inverters, shall be star connected with the star/neutral point brought out to the low voltage terminal box. The transformer star/neutral terminal shall be capable of accepting cabling as specified in Employer's requirements. The start/neutral points of the secondary windings shall be solidly earthed.

Transformer cores

Transformer cores shall be manufactured from non-ageing, low loss and high permeability transformer iron complying with relevant standards. Lifting eyes or lugs shall be part of the delivery.

The core shall be earthed at one point only with well visible and readily removable connection which may be conveniently opened to check the core insulation.

2.2.3.7. Generators

General

This section of the specification covers generator sets regardless of the medium of power. Generators rated 500 kW and above shall be designed for use as reserve generators.

Diesel Generators

Diesel generators shall fully comply with the relevant Montenegro standard. The engine and generator shall be mounted on a skid frame with anti vibration floor pads.

Speed

Main failure sets shall be designed to operate at 1500 RPM.

Outputs

Unless otherwise specified, the motor shall have continuous rated output, which – after allowing for alternator losses – shall be sufficient to run all site loads of the treatment plant. The motor shall be capable of running at 10% overload for a period of 1 hour in course of any 12 hours.

Batteries

Batteries shall be sealed lead-acid. Fully automatic battery charging system shall be provided. Battery monitoring system shall be provided to give early indication of pending failure of the battery system. Adequate ventilation shall be provided to prevent build up of explosive gases.

Bulk fuel tank

Bulk fuel tank(s) shall have the capacity sufficient for 3 days continuous operation on full load and shall not be smaller than 2000 litre. Bulk tanks shall be of welded steel construction.

Day fuel tank

The day tank shall have sufficient capacity to run the diesel generator set continuously, on full load, for 8 hours. Where a combined Day/Bulk tank is specified in Employer's requirements (i.e. for small generators), the capacity shall not be smaller than 2000 litres. Day tanks shall be of welded steel construction.

2.2.3.8. Noise Reduction

Noise levels must fulfil requirements of relevant standards and valid Montenegro legislation. Where required by Employer's requirements, noise level site surveys shall be undertaken.

2.2.3.9. Inductive Flow Meters

Inductive flow meters shall be supplied in compliance with corresponding measures of respective standards and shall be provided with respective certificates and calibration reports. Water gauges shall comply with valid legislation and be verified by authorised measuring group (proved by respective report).

Supplied magnetic inductive flow meters shall contain control unit with LCD display, rubber lining, stainless steel electrode, connecting cable of required length (from the flow meter to switchboard), at least IP 67, power supply 24V, output 4-20mA, 2x 0/1, defined gauge.

2.2.3.10. Switching Devices

Switching devices and pushbuttons shall be in accordance with requirements of the relevant standards.

Main Switches

The main switch or switches of each installation shall be marked as such and shall be identifiable from other switch elements by grouping, colouring or other suitable means, such as to render it (or them) easily located in an emergency. When there is more than one main switch in a building, each shall be marked to indicate which installation or section of the installation it controls.

In a cubicle main switchboard, the main controlling switch (or switches) shall be located in their own section, completely segregated from all other parts of the switchboard with front access.

All main switches on all main switchboards (of cubicle or other type) shall be located as to maintain minimum distance defined in the relevant STN from the finished floor level to the bottom of the switch or connection straps, whichever of them is lower.

Auxiliary Switches

Auxiliary switches for indication, protection and interlocking purposes shall be readily accessible and enclosed by a transparent dust proof cover.

Adequate secondary disconnection shall be included between the fixed portion of a circuit breaker and the moving portion.

Spare auxiliary contacts, one normally open and one normally closed, shall be provided on each switching device.

2.2.3.11. Low Voltage Circuit Breakers

Air circuit breakers shall be rated for controlling loads for maximum circuit operation at 400V, 3 phases and 50 Hz under the specified climatic conditions of the site.

All low voltage circuit breakers shall be housed in control boards, which comply with Employer's requirements and shall not reduce the degree of protection to less than IP54.

Rated current specified in these sections shall be the same as for the circuit-breaker mounted within a switchboard. The service short circuit breaking capacity shall not be less than the maximum power system fault level.

2.2.3.12. Indicators and Meters

All indicating instruments and meters shall comply with relevant standards and shall be of industrial grade accuracy. They shall be suitable for the proposed environment, and be sealed against the ingress of moisture and dirt. They shall be supplied by digital display.

2.2.3.13. Motor Starters

Motor starters shall be of combined type in accordance with relevant standards.

Each motor starter shall be rated as to carry the full load current of its rated duty at its most severe load conditions.

2.2.3.14. Labelling

Labelling of all panels, high and low voltage components and cables shall be in accordance with requirements of relevant standards.

2.2.3.15. Switchboards and Control Panels

General

All motor control switchboards shall be indoor pattern located within the respective plant buildings.

The motor control switchboards shall incorporate motor starter and distribution feeder circuits generally in accordance with Employer's requirements.

The equipment shall be designed for operation from the front, except where necessary for the insulation of voltage transformers where rear access is required. LV and HV compartments shall be completely segregated.

Materials

Enclosures shall be constructed of folded and welded sheet steel.

Suitably insulated busbars and ground bars shall be of high-conductivity, hard drawn copper, and all other main current carrying components shall be of solid copper.

Ground Connection

Each switchboard shall be equipped with a suitably rated ground bar along its full length with provision for bonding to site cables, and a main ground terminal. Ring main units shall be equipped with a main ground terminal and provision for bonding to site cables. The integral

grounding system for each unit shall be solidly connected to the ground bar or terminal. Bolted connections shall be tinned.

Power Supply Circuits

Power supply circuits shall comprise load break switch disconnectors each equipped with indicating instrumentation. Duplicated power supply circuits shall be key interlocked to maintain non-parallel operation of power supply sources.

LV Switchboards and Motor Control Centres

Main switchboards must not be located in motor rooms.

Mains monitoring relays shall be located in the LV switchboard. A test switch shall be provided to break one phase of the supply to the mains monitoring relay to simulate mains failure.

Change-over from mains supply to generator supply shall be by means of a purpose designed change-over system which must fully comply with all requirements of the power supply authority (distribution company).

LV motor starters shall be arranged for direct-on-line starting and single speed drive operation unless otherwise specified or for the limiting the system volts drop of particular plant operation, proposed by the Employer.

All motor starters shall be equipped with basic protection, control, indicating instrumentation and auxiliary circuit equipment in accordance with relevant standards.

Starters controlling common or associated function of the equipment shall be grouped within the switchboards to provide logical circuit arrangements. Common control plant shall be mounted in segregated control switchboard compartments and, as far as is practical, shall be located adjacent to the respective motor starters, or starter groups.

The control switchboards and individual starters shall also provide outgoing volt free status and analogue signals for power system and plant monitoring purposes. They shall have the following voltage-free change-over contacts for connection to the "supervisory control and data acquisition (SCADA)" system:

- signal RUN/STOPPED;
- signal FAILED;
- signal selected to OFF;
- signal selected to LOCAL;
- signal selected to AVAILABLE AUTO

On each starter, panel for starters greater than 1kW each mode of failure provided, i.e. overload, overheating, etc. shall be individually annunciated in addition to the common FAILED indication. For all modes of failure provided Fault reset shall be achieved by the operation of a front panel mounted push-button switch.

Local Switchboards

All conductive parts must be safely covered against touching (according to valid standards). The panel should include all components of one machine equipment or group of equipment.

Unless otherwise stated in the respective items of detailed design, switchboards that are placed in closed dry rooms (e.g. collectors, machinery-rooms or pump stations etc.) shall be made of coated sheet steel panels, switchboards placed outdoors shall be of stainless steel quality.

Switchboards have to include all necessary assemblies and materials such as enclosure, door locks, sealing, terminals, gland and mounting plates, bus-bars, mouldings, PG screw connections (always IP 65 design) resistant to UV- radiation, mounting material, keys, sets for wall mounting and stands made of stainless steel. Each switchboard must be equipped with labels, whose shape, material, colour and description will be determined by the Employer. Switchboard doors shut off with a door lock.

Outdoor Switchboards

The following minimum requirements shall be met:

- Protection category: min. IP 55
- Stainless steel
- Single enclosure, air-conditioned (heat exchanger), or design of box-in-box; the inside box must be heated and the interspace must be ventilated with the possibility of regulating the temperature.
- With a rain canopy made of stainless steel.

Fixing shall be provided by means of a stand made of stainless steel with base flange plate, assembly box plate and supports for cable guiding. The front side (with flow schemes, push buttons, switches, lamps etc.) according to separate specifications shall be covered by another door.

Switchboards in Closed Room

The following minimum requirements shall be met:

- Protection category: min IP 54
- Coated sheet steel
- Self-extinguishing according to the relevant standard
- Wall or floor mounting.

2.2.4. Cabling and earthing

This chapter covers the supply and installation of the necessary new cabling and earthing systems and the removal of redundant cabling, earthing systems and electrical equipment.

2.2.4.1. General Cabling

The Contractor shall supply, install, terminate, test, commission and identify all supply, operation, control, protection and instrumentation cabling systems necessary for operation of equipments, electric power distribution systems, monitoring, measuring and regulation systems and building/site installations supplied under the Contract.

The cabling installations shall fully comply with requirements of relevant Montenegro standards.

The Contractor shall prepare implementation documents with regard to detailed schematic and block diagrams, together with schedules of all cables and conductors proposed to install for power, control and instrumentation systems. The schedules shall include the following information:

- Type of cable/conductor
- Size of cable/conductor
- Number of cores used and spare
- Voltage grade
- Maximum circuit full load current for power cables
- Cable/conductor identification reference
- Cable/conductor route data

In the case that any of the mentioned items is missing from the implementation documents, the Contractor shall amend the design and provide it for approval to Engineer. No works shall start without written approval of Engineer.

Types of Cables and Conductors

Types of cable/conductor shall fully satisfy requirements of relevant standards.

Cable and Conductor Sizes

Core sizes shall be determined in line with relevant standards.

The Contractor shall rate and select power and control cabling to suit the final approved power circuit loading and equipment ratings together with the specified protection, control and monitoring systems. The Contractor shall replace any cable approved and or installed and subsequently found to be inadequate.

Short time fault current ratings of all power cables shall match the maximum fault ratings of the associated switchgears and protection systems.

With the exception of special cables for analogue signal and measuring circuits, the minimum core size for auxiliary power and control cables shall be 1.5mm^2.

All multicore cables provided for the equipment protection, control and monitoring systems shall incorporate 2-3 spare cores. All spare cores shall be identified and marked.

At existing operation devices with measuring and monitoring equipment designed also for other purposes the multicore cables provided under this Contract shall have sufficient cores (and spares) for complete future works installation.

Cable and Conductor Segregation

Power systems operate at different voltages and control, protection and installation circuits for separate units or plants shall be run in separate cables. For internal cable installations prescribed spacing shall be maintained between all power cables in accordance with relevant standard.

Analogue and DC control signals shall not be run in the same cable. The minimum distance between analogue and DC control cables and all other cable systems shall be in accordance with relevant standards.

Cabling Inside Buildings

Cable installations inside buildings shall be run in plastic conduits or strips, galvanized cable trenches and galvanized cable trays, or installed on or suspended from structural walls or ceilings of the building.

In all parts effected by waste water effluent or chemicals creating a chemically corrosive condition, cable tray systems shall be of corrosion resistant materials or stainless steel.

External Cabling

External cabling shall be executed with respect to the requirement on cable systems segregation. Separation between cable systems and all other underground services shall be in accordance with relevant standards.

Where the Contractor wishes to directly bury the cables in the ground, the approval of Engineer shall be obtained and requirements of respective standards with regard to identification and protection of such cables shall be followed.

In cable collectors the specified segregation between power and control cables shall be maintained throughout the whole run of the systems.

The location and arrangement of cable grooves required for tubed cable systems shall be subject to approval by Engineer.

2.2.4.2. Grounding

General Requirements

Metal framework of all electrical and associated equipment, exposed building steelwork, metal enclosures and associated screenings, supports, doors and any other metalwork that are not normally used to conduct electricity shall be effectively earthed at all times in accordance with relevant standard. The Contractor shall deliver and install complete grounding system in accordance with relevant standards.

Each grounding system shall include:

- Main ground terminal or bar. Each main ground terminal or bar shall comprise of a wall mounted steel box, non-ceramic support insulators and bar of sufficient length to accommodate all connections.
- Grounding comprising of grounding strips and rods or plates, connected to main ground terminal or bar.
- Ground bonding conductors connecting metal pipes (gas, water,...), exposed conductive parts and any external conductive parts to the ground terminal or bar.

Grounding Systems

Grounding system shall comprise ground strips, rods, mesh/plates or a combination of them, in order to obtain the required ground resistance.

Ground strips, rods and mesh/plates shall be placed into the ground in accordance with relevant standard. When the installation is completed, soil resistivity or other tests shall be carried out and witnessed by the Engineer, in order to ensure that the required ground loop impedance figure falls within the limits defined in the relevant standard.

Lightning Protection

All structures and buildings shall be provided with lightning protection in accordance with relevant standards. Each structure shall be provided with one or more lightning arresters mounted at the highest points of the building or structure.

2.2.5. Automation Equipments

The control and automation equipment shall comply with the operation conditions and environment for which they were designed:

- Its routine and occasional maintenance throughout its life shall be a practical minimum, compatible with the preservation of maximum reliability.
- It can withstand the electric, mechanic and atmospheric stresses to which it may be subjected under operational conditions, without deterioration or failure.
- It is constructed to the highest available quality standards with stress laid on reliability, accuracy and repeatability.

Where more than one component or item of equipment is supplied to perform a particular function, all such items shall be identical and interchangeable.

The degree of protection for equipment enclosures shall be in accordance with relevant standards as follows:

- IP54 for indoor applications
- IP65 for outdoor applications
- IP68 for sensors/transducers and other equipment mounted to valve chambers or similar locations

All equipment cabinets shall have lockable doors and any ventilation openings shall have effective dust filters. Any cooling fans shall have fan failure alarm contacts connected into the relevant alarm system for the event of failure.

External equipment shall be protected from direct sunlight by a well ventilated cabinet, canopy or other approved type of protection.

Equipment in air conditioned locations shall be rated for continuous operation in ambient temperature up to 35°C. External equipment and internal equipment not in air conditioned locations, shall be rated for continuous operation over the ambient temperature range -20°C to 40°C or according to requirements of relevant standard.

All equipment shall be protected against aggressive and/or corrosive environment.

All analogue transmitters, receivers and direct wire transmission systems shall have a signal level of 0/4–20 mA or 0–10 V.

2.2.5.1. Software

Software shall be of modular arrangement and adopted for the operation of reservoirs, pumping stations, municipal waste water treatment plants and waste water pumping stations. The use of *Beta versions* is not permitted.

All visualisation and records must be in the national language.

The Contractor guarantees to deliver troubleproof tested software that has been successfully in operation in corresponding environment according to the state-of-the-art technology.

Payment of all licences to the licence bearer must be settled by the Contractor.

All information to be monitored shall be displayed on a fully graphic colour monitor.

Software applications, programmes and macros as well as process diagrams and technological parameters shall be on-line producible, rectifiable and extensible.

The Contractor shall ensure delivery of a functional complete system meeting the requirements of specifications.

The Contractor shall ensure that the required functionality will be provided when using the offered components. Parts that are not specified must be described in technical terms.

2.2.5.2. Operating System

Modular configuration of the system and possible extension necessary for future presupposes an operating system meeting the following specifications:

- 64-bit operating system
- Completely multitasking and multi-user system, "collapse-free" application ensuring that potential failure does not cause collapse of other programs or the whole system
- Integrated network support enabling the relevant administrator to divide computer capacity and allocate rights and tasks within the network
- Compatibility of the network with another networks to be connected

- Access and safety control by passwords and login protection which can be adjusted by the administrator (possibility of various access levels)
- Possibility of remote display via the internet
- Possibility of remote maintenance via the internet
- Hardware independence on manufacturer, operable on power computers or terminals
- Open, modular structure
- Platform with free configurable and menu operated windows
- Programming language C must be available for the offered operating system

The above requirements must be met for both process data server and all peripheral computers.

2.2.5.3. User Platform

The staff should not be considered to be familiar with the software, programming and operating system needed to operate the computer. For this purpose an application software package must be offered which enables the operator to carry out changes in the protocols, reports, parameters of failure reports and operating messages, analogue values, commands, numerical values, data from laboratory, calculated values, process pictures etc. Software for process displaying must be set up user friendly in graphical user interface.

Furthermore, the software must meet the following requirements with respect to controllability:

- Application of windows with the option to shift the windows, maximise/minimise them and change their priorities (overlaying of windows).
- The application software must identify erroneous steps and nonsensical commands in such a way that the operators are not faced with the problems of basic functions of the system software and the operating system.
- Fault messages must be displayed by the system as a non-ciphered text. On-line help must be provided with detailed instructions for a corresponding fault message.
- The system shall offer the user created options preferably in the dialogues, e.g. by virtual control areas or items in the menu.
- Manual inputs (via the keyboard) and laboratory values are generally subject to the check of correctness before being accepted by the system (e.g. a check of limit values, level of user's security).
- The system functions available to the user must be displayed in a logical structure in the so-called menu displaying in the form of non-ciphered text. The selection of individual sub items of the menu provides for new partial functions so that the system can interpret the users wishes explicitly.
- At any moment there must be an option of cancelling the actual choice or aborting execution of a command. Even aborting of the last entered parameter or the last

VODOVOD I KANALIZACIJA d.o.o. VIK DANILOVGRAD
STRABAG AG

command must be feasible through the choice of the control area or a functional key (Function UNDO). Generally it should be possible to cancel more commands/inputs.

- Options for selections that are not available at the moment must be clearly marked as „Function not possible" (e.g. grey background).
- In order to enter parameters (limit values, range of measurement switching points etc.) it is necessary to have masks for entering available. These must be standardised for the purpose of uniform attendance.
- When shifting the mouse cursor to a selectable object a corresponding command/function appears with is consequences in a form of an non-ciphered text in the status line. There should be an option for switching off the status line.
- The user shall have at his/her disposal the actual options for selections with their consequences in the form of non-ciphered texts so as to avoid permanent browsing through the user manuals.
- Sufficient helps concerning the arrangement of the keyboard shall be available. For frequently used commands, e.g. reset etc. there should be an option of effecting these commands through the functional keys.
- The software shall provide the user with an option of switching on the screen saver, activated in adjustable time intervals

2.2.5.4. System Spare Capacity

Basically, the whole system shall be designed so that at least 30% spare capacity will be available to the Employer after the hand-over for the purposes of extending the data volume, or for new additional/extended functions or modules for hardware and software.

Data memory dimensions (hard disk etc.): min. 100% spare capacity.

The Contractor shall ensure that at least one more service computer/service process station can be integrated into the system - with no requirements for software and hardware extension (the exception being network connections).

The Contractor shall include the spare capacity or possibility of extending in the unit price.

2.2.5.5. Minimum Response Time

All the equipment for process control (as well as for the substations) must be designed in such a way that the following minimum response time is kept upon displaying of processes, displaying of curves and interference in the process:

- For the path from operator's interface (keyboard, mouse or trackball, monitor) through the HMI, communication devices (LAN network, GSM network) and PLC up to the final control element and back (confirmation of the interference) it is necessary to keep a total response time of max. 1 sec in the final configuration (the time required by the final control element for answering back not included).
- The processing and response time of the system for the process control in total < 1 sec

D.O.O. VODOVOD I KANALIZACIJA VIK DANILOVGRAD
STRABAG AG

- Other response times in accordance with the corresponding subchapters.

These response times must be guaranteed:

- For final configuration of the equipment
- For graphic displaying on service computer with a minimum resolution of 1920 x 1200/true colours
- For loading of the service bus-bar of the network (e.g. continuously operating streamer)
- For continuous operation of all the terminals
- The stated periods shall allow for prolonging if a special case of loading occurs at a time of picture modification

2.2.5.6. Adjusting of Analogue Signals

The software must include an adjusting system for analogue signals by means of which the analogue signals can be individually adjusted. The adjustment shall be carried out by the Contractor. The following characteristics must be supported:

- Adjustment of all analogue PLC inputs (4-20 mA, range of measurement min/max, format of figures etc.).

2.2.5.7. Plausibility Control of Measured Values

In order to capture incorrect or wrong measured values, the user must have a chance to set ranges on plausibility for each of the analogue signals (measuring). The upper and lower limits of the plausibility range must be adjustable in the corresponding unit of measurement (e.g. l/s, m3/s. °C etc.). A signal which is out of the limits determined by the operator must be replaced by a different value (see Substitute Values).

In the case values are out of the plausibility range it is necessary to have a corresponding entry in the protocol or to carry out further data processing.

Determining of the plausibility range is carried out by the Employer and should be a part of the training.

2.2.5.8. Substitute Values

The operator must be given the option of pre-selecting the plausibility range for all analogue signals (e.g. in a table containing all the measurements for each single measured value separately). Both the manual activation of the substitute value (by the operator) as well as automatic activation shall be possible. The substitute values are then applied automatically if:

- The relevant analogue signal in the range 4-20 mA drops below the limit of 4 mA (the measuring instrument is disconnected or cable is broken),
- Limit values entered by the operator are exceeded or not achieved.

The substitute values shall be designated to the protocol in a corresponding way, i.e. shall be marked by the "substitute value" flag and displayed.

D.O.O. VODOVOD I KANALIZACIJA ViK DANILOVGRAD
STRABAG AG

2.2.5.9. System Start-Up

Use of uninterrupted power supply equipment (UPS device) should prevent the failure of server stations. If, despite all preventive and back-up precautions, there is a failure of the computers, an independent start-up of the system shall be executed as described below:

- Automatic record of the time of failure (based on the last archived records) and time of return to be entered into corresponding protocols
- Record of the system failure in the protocol on event and fault list
- Standardising and initiation of substations (general enquiry) to update the data bases
- Time synchronisation of all substations to the system time
- Display of the actualised overview picture of equipment
- Display of actual alarms in alarm window

2.2.5.10. Password Protection

Password protection must be set up for all server stations, main programming computer and all other computers specified by the Employer.

When allocating passwords consideration must be given to different authorisations and tasks delegated to the operating staff. These must correspond to the possibilities of service activities.

Entering of passwords or safety levels of passwords shall be carried out by the Contractor in accordance with the Employer. The administrator must have the option of free selection and modifications of passwords for authorised personnel.

The passwords must be available on selective bases, e.g. also for various levels:

- Monitoring
- Operating
- Access to reading of archive files or protocols/reports
- Access to writing to archive files or protocols/reports
- Reset of alarms/failures and warning messages
- Reset/confirming/zero setting of procedures for maintenance
- Process control (individual control, changes of values and parameters)
- Manual entering
- Changes in protocols and balances
- Programming of picture and protocol generation
- Programme changes in substations
- Connecting assignment in the substations
- Assignment of non-ciphered text

D.O.O. VODOVOD I KANALIZACIJA ViK DANILOVGRAD
STRABAG AG

- Changes of remote alarm connections

2.2.6. Mechanical equipment

The following articles specify general machine & technological requirements and standards of implementation for machines, equipment and installations. The requirements are generally valid with the exception of cases when Employer's requirements declare other specifications.

All technological equipment shall be approved by appropriate authorised bodies (technical inspection) after they are installed.

2.2.6.1. Rating the Machine Equipment

All materials shall be suitable for the respective use, new and of first class trade quality, without imperfections and with guaranteed long life and minimum maintenance.

The materials shall be selected according to intended use of the special parts and their loads. As a result of increased load and requirements in waste network, painting systems are only suitable under certain conditions and their maintenance is much more costly. Concurrently, attention shall be paid to the use of steel and its specific resistance.

In consequence of required strength and higher weight, frames shall also be made of steel or cast iron. However, unless they are made of grey cast iron or unless otherwise stated in Employer's requirements, the delivered frames shall have bright surface finish, be sandblasted and hot-dip galvanized.

It generally applies that jointing and anchoring material, pipe clamps, brackets and pipe hangers which will be permanently or partly immersed in water shall be made of stainless steel; others, placed in permanently dry environment, may be (with the exception of anchoring to concrete) delivered as hot-dip galvanized.

2.2.6.2. Transport, Dispatch and Installation of Equipment

The contractor shall suggest their own process of transportation and acceptance of machine equipment delivered to the construction site or to storage facilities, and shall be responsible for any damage that can appear during the take-over phase. The contractor shall, at their own expense, ensure all equipment, tools, measures, pressure gauges, temporal place of residence and all qualified and non-qualified staff required for installation of the entire machine equipment and accessory in order to allow its complete installation and hand-over in good operation state.

Before starting these actions, the contractor shall examine the construction part and together with Engineer execute all necessary measurers to allow machine equipment installation without interfering with other works and operation of other machine and electrotechnical equipment. Before delivering the main machine equipment, the contractor shall supply all auxiliary parts needed for implementation together with the main equipment to the construction site.

The contractor shall expect that the works on construction site will be interrupted as to allow permanent operation of the existing machine equipment. The contractor is expected to include sufficient time reserve for the above consequences.

Technological part of the delivery shall contain all temporal structures required for assembling (scaffold mounting, supports...) that may be needed and necessary for safe and efficient construction and assembling of the all work and auxiliary works. These temporal structures shall be provided at the contractor's own expense. Any special construction hoist needed for the equipment transloading shall be ensured by the contractor on their own expense and left on the construction site for Employer's use without charge after the Contract termination.

The contractor shall provide appropriate protection of the machine equipment till its installation and until the Acceptance Report is issued for the delivered equipment. Specifically: the contractor shall provide and fix sufficient covering by tilts etc. to prevent penetration of dust and impurities during construction phase and until termination of final construction works.

Functional processes must always be adjustable and must allow advance setting (tuning) unless otherwise stated. The electrotechnical equipment must be delivered as to allow its fully automatic operation without potential supervision. It must include all necessary safety and regulation components and devices as well as the respective operational manuals and guidelines for emergency situations.

All measurers shall be provided with respective certificates and calibration reports.

2.2.6.3. Noise Damping

Noise limits apply generally for all equipment and are as follow:

Spaces with occasional supervision	95 dB
Spaces with permanent supervision	55 dB
Offices	45 dB
Workshops	55 dB
Outside the buildings	70 dB
Border of hygienic protection zone	40 dB

2.2.6.4. Service Life

The following minimum periods of operation of various equipment and paints are required under the condition of adhering to proper operation, maintenance and inspections as stated in manufacturer's manual:

Pumps	8 years
Blowers	8 years
Stirrers	10 years
Air-entering elements	8 years
Paints	8 years

2.2.6.5. Selection of Materials

All materials contained in the scope of Contract shall be appropriate for the intended use, new and of first class trade quality, without imperfections and with long guaranteed life and minimum maintenance.

The materials shall be selected according to intended use of the special parts and their loads. As a result of increased load and requirements in dealing with potable water, painting systems are only suitable under certain conditions and their maintenance is much more costly. Concurrently, attention shall be paid to the use of steel and its specific resistance.

In consequence of required strength and higher weight, frames shall also be made of steel or cast iron. However, unless they are made of grey cast iron or unless otherwise stated in Employer's requirements, the delivered frames shall have bright surface finish, be sandblasted and hot-dip galvanized.

It generally applies that jointing and anchoring material, pipe clamps, brackets and pipe hangers which will be permanently or partly immersed in water shall be made of stainless steel; others, placed in permanently dry environment, may be (with the exception of anchoring to concrete) delivered as hot-dip galvanized.

Jointing material for flanged joints under the ground – all screws, washers and nuts made of stainless steel A2 – 70.

Stainless steel must not be in contact with galvanised material (or each such contact must be separated by an non-conductive layer) to avoid galvanic corrosion.

2.2.6.6. Prevention against Corrosion

Anticorrosion protection of the structure shall be based on defining the environment according to the appropriate valid standard and requirements on the structure and surface finish service life.

Each surface finish shall further be provided in compliance with manufacturer's operation manual (e.g. first coat of paint, temperature for application, preliminary surface treatment by derusting, sandblasting etc.).

General

Works shall be done indoor, in dry atmosphere without dust.

First coat of painting system shall be provided within 2 hours after the surface is cleaned.

Materials used within one painting system shall be mutually compatible.

Paints shall be provided in layers of even thickness.

Drops and air pockets are not permissible.

Each coat of paint shall be of different shade.

Subsequent coats of paint system shall be provided in mutually perpendicular directions.

In the case of damage the rust has to be removed by a sharp tool or a brush.

Repairs shall be carried out as soon as possible, according to the prescribed procedure.

No cleaning of paints shall be carried out without Engineer's approval.

Thickness of layers shall be measured after they dry.

When mounting stainless steel pipes, the following principles have to be followed:

- When working with stainless steel it shall be observed very strictly that the high quality steel in principle never gets to any contact with standard steel.
- Stainless steel shall be handled skilfully and with great care. Pipes and fittings shall be stored on pieces of wood. Proper grinding and cut iron-free discs shall be used for grinding. When welding it, only the WIG, MIG and manual electrode processes may be used.
- Welded joints shall be pickled and passivated in the topping.
- Consistent metal separation shall be provided at holders (anchors), supports, flanges, threads etc. of other material than stainless steel.
- It is absolutely inadmissible to combine galvanized steel components with stainless steel.

Cleaning, Surface Preparation

Sandblasting of structural surfaces shall be in accordance with SA 2.5 (ISO 8501, SIS 055900) or SA 3. For hot-dip galvanizing the SA 3 is common.

Components shall be complete before sandblasting with the exception of places that cannot be accessed after welding. These shall be cleaned by sandblasting before the welding and must be inevitably protected afterwards.

Grease shall be removed before sandblasting; all parts shall be dry during the process.

Any roughness shall be smoothed, stopped and dressed after cleaning and before the paint; surface shall be clean.

Holes and draughts shall be treated and their surface may only be re-welded with Engineer's approval.

Blasting material shall be steel wire blasting medium (diameter 0.7mm) and mixture of steel wire blasting medium and steel wires (50% : 50%).

Rust from cast iron parts shall be removed with great care.

Before applying another protective coat, the surface shall be blasted or slightly ragged after hot-dip galvanizing.

Protection

Unless otherwise stated in individual items of the structure, the parts shall be protected as described in following articles.

External steel pipes buried under the ground

Two layers of two-component epoxy resin with 33% of micaceous iron oxide in 40 microns, doubled asphalt-impregnated felt.

D.O.O. VODOVOD I KANALIZACIJA DANILOVGRAD ViK
STRABAG AG

Steel products inside buildings

Blasting SA 2.5 or SA 3, 30 microns of base zinc, 50 microns of two-component epoxy resin with 33% of micaceous iron oxide, 35 microns base layer of alkyd resin, two 35-micron layers of alkyd resin after mounting.

Blasting SA 2.5 or SA 3, 30 microns of hot-dip galvanization, slightly ragged surface, 40 microns of two-component epoxy resin with 33% of micaceous iron oxide, 35 microns base layer of alkyd resin, two 35-micron layers of alkyd resin after mounting.

Cast iron inside buildings

Light cleaning, 40 microns of two-component epoxy resin with 33% of micaceous iron oxide, two 35-micron layers of alkyd resin after mounting.

Steel parts inside buildings

Blasting SA 2.5 or SA 3, 30 microns of base zinc, 50 microns of two-component epoxy resin with 33% of micaceous iron oxide, 75 microns of base epoxy layer, 30 microns of polyurethane coating.

Blasting SA 2.5 or SA 3, 30 microns of hot-dip galvanising, slightly ragged surface, 40 microns of two-component epoxy resin with 33% of micaceous iron oxide, 75 microns of base epoxy layer, 30 microns of polyurethane coating.

The above layers of 75 and 30 microns may be applied after mounting.

Cast iron parts inside buildings

Rust removal, grinding, degreasing, to 40-micron layers of two-component epoxy resin with 33% of micaceous iron oxide, 75 microns of base epoxy layer, 30 microns of polyurethane coating.

The above layers of 75 and 30 microns may be applied after mounting.

Concreted steel parts

Blasting SA 2.5 or SA 3

Concreted aluminium parts

grinding and degreasing, two 100-micron layers of epoxy-tar coating.

Supports imbedded in concrete

Epoxy-tar coating.

Stainless steel

Without coating. Steel 17 240, DIN 1.4301 or equivalent.

D.O.O. VODOVOD I KANALIZACIJA VIK DANILOVGRAD
STRABAG AG

Coatings

All delivered equipment shall be provided with protective coating or otherwise protected in compliance with requirements of respective valid standards. Machines, pipes, fittings and valves shall be provided with top finishing coat from the manufacturing plant.

Before applying the coating systems, the Contractor shall submit technological process of coating application including surface treatment before the coating application to Engineer for approval. Together with the technological process, material safety data sheet of coating materials shall also be submitted to Engineer for approval. In the cases that were not mentioned above the minimum requirement shall be synthetic paint in three layers with minimum total thickness of 150 microns.

When preparing the surfaces before the coating system application, the Contractor shall use materials and processes that do not jeopardize health of their own or other workers. The Contractor shall keep written records of the executed painting works, accessible for Engineer. All data important for quality performance of the work and quality ageing of coating shall be included in the records.

Generally, the following coatings can be applied:

Base zinc coating: two-component epoxy resin with 90 to 92% of zinc in one layer.

Epoxy resin: two-component paint on thixotropic base of epoxy resin (min. 15%) with 33% of micaceous iron oxide.

Epoxy-tar: fluid epoxy resin with epoxy equivalent 180 – 210. The ration of epoxy-tar shall be lower than or equal to 1 and the epoxy portion lower that 15 weight percent. Only inert fillers shall be accepted.

Alkyd resin: coating on the base of alkyd resin with at least 70% of dry matter.

Chlorinated rubber coating: coating with chlorinated plasticisers.

Base epoxy: two-component coating on the base of epoxy resin.

Polyurethane coating: two-component finishing coat based on polyurethane resin with at least 50% of dry matter.

Each surface finish shall be provided in compliance with manufacturer's operation manual (e.g. first coat of paint, temperature for application, preliminary surface treatment by derusting, sandblasting etc.).

All paints shall display high quality and long service life.

Coating Tests

Engineer is entitled to order:

Long-term testing by immersing two small parts to waste water, sludge or gas. Samples shall be immersed in water of 60°C for up to 96 hours. Result: no pimples, soaking or separation of parts is allowed.

Mechanic resistance: round plates loaded by tension in plate axes. Required strength for ripping shall be min. 500N/cm2.

Engineer is entitled to try in situ if the coating can be removed by normal knife.

Abrasion resistance: tested surface shall be placed under the angle of 45° under a glass tube, 2m long, diameter 22mm. Alumina dust shall be spilled through the tube to the tested surface with coating and it shall be detected if the base material is not visible or if coat layers do not come loose. Size of the particles shall be 20 – 30 according to the ASTM mash. Required resistance is min. 30l.

Tests shall be carried out on test surfaces supplied by the Contractor.

2.2.6.7. Hot-Dip Galvanising

Should steel or forge steel be hot-dip galvanised, the galvanization shall be provided by immersing to molten metal and shall meet all aspects of the respective valid standard.

After pulling the steel from galvanizing bath, the resulting finishes shall be smooth, continuous, without rough imperfections. Edges shall be clean and surfaces glossy.

Anticorrosion protection of parts of equipment accessories such as pumps, compressors, motors, gear boxes and hydraulic units shall be adjusted according to their main aggregates. Alternatively, the same method of anticorrosion protection shall be provided.

In the case that the anticorrosion protection differs from the above requirements, it shall be recorded under relevant items; such solution is only permissible with Engineer's approval.

2.2.6.8. Welding

Welded structures and technology shall comply with relevant valid standards.

All welding activities shall be provided under the most suitable working conditions with use of the latest state-of-the-art welding technologies. All welding is to be provided by welders skilled and qualified for the actual welding process. The welders shall have the appropriate professional qualifications.

Welding technology shall be selected with respect to materials that need to be welded. Methods and procedures accepted for welding in workshops and on the construction site shall be submitted to Engineer for approval before the works start, including the list and qualifications of welders and their identification numbers. Records of welding procedures and welders' qualification certificates for the performed work shall be archived within the construction site so that the Engineer can examine them at any time. It applies generally, that the contractor shall submit Engineer technological procedure for welding and shall only start with the works after they are approved by Engineer. In justified cases the suggested welding procedure shall be supported by test weld joints. Number and method of assessment for such test welding including its scope shall be agreed before its execution. In principle it applies that until the submitted technological procedure is approved or results of the test are not available, welding works shall not commence. Test weld joints shall be made on identical materials – quality and thickness of the base material, quality and type of additional

materials, other conditions of welding such as preheating, proper cooling or possible weld annealing.

If required by the nature of welding works, all welders shall perform a working test before the works commence. Only the welders who pass the working test shall be allowed to carry on with welding works. Welders permissibility shall be determined by Engineer or his/her authorised representative upon the qualification and working test results of individual welders.

2.2.6.9. Open Mesh Floorings

Unless otherwise stated in Employer's requirements, open mesh flooring shall have rectangular openings and be of non-skid surface made of hot-dip galvanized mild steel. Mesh floorings in distribution reservoirs and in potable water pumping stations shall be made of composite materials. These floors shall comply with the relevant valid standard and shall be subjected to Engineer's approval.

All floors shall be rated at the min. load of 400 kg/m^2 per span and shall be equipped by a curb at the side of pathways.

Stairs shall be rated, manufactured and assembled as to be able to bear 400 kg/m^2. Treads shall have open meshes and shall be fixed to string boards, not directly to concrete.

Stairs shall be made of hot-dip galvanised steel. They shall be manufactured outside the construction site and shall include string boards supporting the treads and completed by handrails and posts.

2.2.6.10. Handrails and Ladders

Unless otherwise stated in Employer's requirements, all handrails shall be made of stainless steel or composite materials and shall be constructed and manufactured in compliance with valid standard measures and other applicable legislation on safety requirements.

All ladders, stairs or other openings shall be protected by handrails in such manner that complies with valid standard requirements. Access to ladders or openings shall be protected by two galvanised suspension chains fixed on one end and disconnectable on the other one.

Ladders shall be made of stainless steel, composite materials or mild steel, hot-dip galvanised in manufacturing workshops according to Employer's requirements. Profiles and distances of ladder steps shall comply with relevant standard requirements and other applicable legislation on safety and shall be equipped by flanges and drilled holes allowing wall installation on both sides. All ladders longer than 2m shall be equipped by safety cages or divided by a landing platform complying with requirements of valid relevant standards.

2.2.6.11. Lifting Devices

Lifting devices with gear and related equipment shall comply with relevant standards. The contractor is obliged to execute revision tests on all lifting devices.

Unless otherwise stated in Employer's requirements, travel cranes shall be manually or electrically controlled and shall include overhead travel, crane truck and hoist, electric motor,

gear box and machine equipment, operation and maintenance manual and all other necessary items such as bolts and nuts, shock absorbers, fixing elements etc.

Should the cranes be electrically controlled, they shall be delivered as complete with flat cables on roller suspensions, with control elements, gear boxes and motors providing 15m/min speed in both horizontal directions. Lifting speed shall be approx. 2m/min with travelling speed 0.2m/min.

Unless otherwise stated in Employer's requirements, electric cranes shall be controlled from the floor by mobile main controller with buttons or by a hoist controlling movements in all directions and speeds.

The delivery shall also comprise revision books of the equipment and static calculations for crane runways. Before putting into operation, all lifting devices shall be checked by technical inspection and Engineer.

If the existing lifting devices are to be used for machine and equipment installation (e.g. when replacing the machines and equipment), they shall be safe and functional. The Employer is obliged to provide the contractor revision reports on all these devices. The contractor shall not start these works before they receive these revision reports from the Employer.

2.2.7. Pipes

2.2.7.1. General Requirements

All pipes and mounting parts selected upon this Contract shall comply with respective standards, shall be of round profile and uniform thickness, without deposits, crimpage, detritus and other faults and shall be constructed to suit the intended operation media, pressures and temperatures.

Pipes shall be delivered and installed completely with all flanges, couplings, suspension systems of joints, anchors, anchor bolts and screws, anchor fillets in concrete, expansion anchors, flange packing, flange bolts and nuts, pipe supports, wall fittings, blank flanges, joints, accessories and materials necessary for proper installation and operation of the pipe.

Pipes shall be arranged in such a way as to allow easy dismounting of the pipe and other items of machine equipment.

Expansion and dismounting connections shall have double flanges. Dismounting connections shall be able to withstand total stress load of the maximum pressure that shall appear in the pipes.

To allow easy dismounting of all pumps, elastic flange connections in both suction and exhaust pipe and arrangement of these connections in relation to building structures must be flexible.

All pipes shall be appropriately supported. If the pipe goes through a wall, bushing and connection flange shall also be supplied. Terminal outlet connection of the pipe shall correspond with the connection point of external delivery pipe.

Pipe distributions and their fixing shall be provided in such manner that does not transfer additional load on necks of devices, pumps etc.

Pipe routes shall be earthed in compliance with requirements of valid standards in order not to transfer static electricity between individual parts. Flange connection shall be shunted conductively within the meaning of valid standards.

After the laying/mounting is completed, all pipes shall be tested in accordance with valid regulations and requirements of valid standards with respect to operation medium. The contractor shall submit the scope and form of examining in writing to Engineer for approval. Testing procedure shall also include required safety measures during the pressure test. Report shall be written about test course and results. The report shall be confirmed by signature of all test participants. In the case of an unsuccessful test, repeating of the test including test conditions shall be agreed in writing.

Pipes of Ductile Iron

All cast iron pipes, fittings, valves, and other components of water supply systems must comply with EN 545 and ISO 2531. Inner and outer surfaces protection of the piping must comply with EN 545. Nominal inner diameters must comply with relevant regulations.

Material production and quality

Ductile iron, also known as nodular cast iron, nodular-graphite cast iron, is characterised by the content of nodular graphite in resulting cast pieces. Compared to flake-graphite cast iron it has higher tensile strength, high yield limit, and high ductility. An internationally accepted value for ductile iron density is 7,050 kg/m2.

Ductile cast iron pipes must be produced by one of the following procedures:

- Centrifugal casting to metal moulds with or without lining,
- Centrifugal casting to sand moulds,
- Casting to sand moulds,
- Casting to metal moulds.

Ductile cast iron fittings and accessories must be produced by one of the following procedures:

- Casting to sand moulds,
- Casting to metal moulds.

Pipes, fittings, and accessories must be fitted with fixed or loose flanges.

Pipes and fittings may be supplied with various joint types. Pipes and fittings with socket joints sealed with elastomeric sealing rings and flanged fittings are recommended to be used.

Pipes and fittings must comply with relevant regulations and must pass all specified tests. Pipes, fittings, and accessories must not have any defects preventing their correct use.

In order to ensure changeability of supplies from various sources, plus tolerances of plain end outer diameter of pipes and fittings, if measured peripherally in the place of joining, shall not exceed 1 mm.

Fittings such as elbows, tees and reduction pieces shall comply with respective standards. Thickness of their walls shall be at least the same as the thickness of walls of direct pieces.

Protective coatings

All pipes and fittings must be supplied with coatings/paints applied in the production plants. Inner and outer paints must comply with provisions of a relevant regulation, must dry quickly and adhere, and must not peel off. Inner coatings must not contain water soluble components or admixtures which could give water any off-flavour or odour following a reasonable pipe rinsing. Inner coating of piping supplying potable water or edible liquids must not contain any toxic components.

Protection against corrosion must comply with relevant regulations.

Pipes of Stainless Steel

All pipes and fittings within pumping stations and shafts shall be made of stainless steel.

Steel pipes shall be joined by welding or through flanged joints.

Material production and quality

Pipes and fittings must comply with relevant regulations and must pass all specified tests.

Steel pipes and fittings must be manufactured in the production plant. Oblong and spiral shapes must be made by automatic submerged arc welding, except pipes with small inner diameters.

Protective coatings

All pipes and fittings must be supplied with coatings applied in the production plants. Inner and outer coatings must comply with provisions of a relevant regulation

Welding

Welding shall be performed according to provisions of relevant regulations and EN ISO 6520-1, EN ISO 6520-2, EN ISO 6947, EN ISO 9692-2, EN ISO 9692-3.

The contractor shall submit a detailed description of the welding procedure complying with a relevant regulation. This procedure must contain all dimensions, combinations of materials to be joined, and all repair welds. The procedure shall be approved by Engineer.

All welding work must be executed by qualified welders and strictly in compliance with specified welding procedures.

Protection against corrosion

Inner and outer systems of corrosion protection must be applied in the production plants. Pipes and fittings must be supplied to the construction site with sufficient amounts of materials enabling protective systems of welded joints to be finished on the site.

Where required by a relevant regulation, galvanic protection against corrosion shall be applied.

Fittings such as elbows, tees and reduction pieces shall comply with respective valid standards. Thickness of their walls shall be at least the same as the thickness of walls of direct pieces.

Unless otherwise stated, flange connections shall have welded edge ring and swing flanges. Distance circle of bolt holes and number and size of bolts shall comply with the respective valid standard. Stainless, aluminium or plastic flanges with internal metal ring can be used as swing flanges. Swing flanges and jointing material of galvanized metals are not allowed for stainless pipe distributions.

Plastic Pipes

PVC piping

PVC pipes and fittings for pressure-less usage must comply with EN 1401-1. PVC pipes and fittings of pressure systems must comply with EN 1452-3. Pipes of min. PN 10 shall be used.

With the exception of flanges joints and where specified or approved by Engineer otherwise, the pipe joints must be flexible and sealed with rubber rings or sealing approved by Engineer, and must pass all specified tests.

The min. rigidity of all pipes and fittings must be SN 8 (8 kN /m^2).

Sealing rings must not affect the piping system and must not cause failures of testing sets as specified in provisions of a relevant regulation. Material for sealing rings must comply with EN 681-1.

Adhesive must not have adverse effects on the properties of pipes and fittings, and must not cause leakage of the system.

Joining pressure PVC piping systems: Pipes and fittings shall be joined through in-cut socket joints fitted with elastomeric sealing rings which are included in the delivery. With other piping systems they shall be connected through preassembled loose flanges made of ductile cast iron and elastomeric sealing rings of cast-iron flanged joints.

Polypropylene (PP) piping

Polypropylene pipes and fittings for pressure-less usage must comply with EN 1852-1. PP pipes and fittings of pressure systems must comply with relevant regulations. Pipes of min. PN 10 shall be used.

With the exception of flanges joints and where specified or approved by Engineer otherwise, the pipe joints must be flexible and sealed with rubber rings or sealing approved by Engineer, and must pass all specified tests.

The min. rigidity of all pipes and fittings must be SN 8 (8 kN /m^2).

Sealing rings must not affect the piping system and must not cause failures of testing sets as specified in provisions of a relevant regulation. Material for sealing rings must comply with EN 681-1.

Adhesive must not have adverse effects on the properties of pipes and fittings, and must not cause leakage of the system.

Joining pressure PP piping systems: Pipes and fittings shall be joined by thermal welding as specified in relevant regulations:

- butt welding,
- polyfusion welding.

Polyethylene (PE) piping

Pipes and fittings made of high-density polyethylene (HDPE) must comply with EN 13244 (pressure applications), EN 12666 (pressure-less applications). Pipes of min. PN 10 shall be used for pressure applications.

The min. rigidity of all pipes and fittings must be SN 8 (8 kN /m^2).

Joining pressure piping systems: PE pipes and fittings shall be joined by thermal welding as specified in relevant regulations:

- butt welding,
- polyfusion welding,
- electrofusion welding

Pipes of smaller inner diameter may be joined also through mechanical fittings. PE pipes and fittings of pressure systems must not be joined with adhesives.

Pipes used for pressure supply of potable water must comply with requirements of EN 12201.

Glass-fibre reinforced plastic (GRP) piping

Pipes and fittings made of GRP must comply with provisions of a relevant regulation and of EN 14364. Pipes of min. PN 10 shall be used for pressure applications.

The min. annular rigidity of all pipes and fittings must be SN 5,000, or 10,000 according to the pipe laying depth and loading.

Pipes must have straight faces, smooth outer surface, and constant outer diameter along their whole length, enabling them to be cut and joined in any position along the whole length without any special preparation of the cut-off face, except resealing exposed fibres. Pipes

shall be joined by methods and with materials specified by their manufacturer (generally with couplings on rubber rings).

Drain pipes

Plastic pipes complying with relevant regulations shall be used, with circular cross-section, enabling continual piping of required length to be formed. Pipes walls must be perforated. Smooth, flexible or coated flexible pipes are permitted to be used.

Material quality

All pipes and fittings must be transported, stored, handled, laid, and joined strictly in compliance with the manufacturer's instructions and recommendations to prevent any damages to the material and insulation of the pipes and fittings.

The storage method of material for horizontal piping on the construction site must prevent it from being damaged or contaminated inside.

Plastic pipes must be resistant to ultraviolet radiation.

The Contractor shall inform the manufacturers on climatic conditions on the work site and apply for instructions for storing these materials on the site. After being approved by Engineer, these instructions must always be complied with.

2.2.8. Valves and Cocks

Valves and other closing cocks shall be supplied in compliance with respective measures of valid standards and with certificates of quality.

Material construction of closing valves shall suit working conditions and the medium according to appropriate measures of standards – ductile iron at least GGG 40, external surface finish – heavy anti-corrosion protection with blue top paint, internal surface finish – epoxy resin sintering with minimum thickness of 250 micrometers according to GSK, fittings – full flow.

Valves and cocks shall have the same DN as the pipe to which they are mounted. They shall have flanges according to the appropriate standard and shall be able to withstand the same test pressures as the pipe on which they are installed.

Valves and cocks shall have identification marks and/or labels in compliance with respective standards.

Mounting and application of valves and cocks shall comply with instructions and requirements of manufacturers.

Relief valves shall be set on manufacturer's test stand or by an authorised organisation and shall be provided with a label stating the test/opening pressure. Relief valves shall be supplied with certificate as described above and, on top, with a report on setting the opening pressure.

2.2.8.1. Closing Valves

All closing valves shall comply with the respective standard.

VODOVOD I KANALIZACIJA DANILOVGRAD ViK
STRABAG AG

Closing seat wedge shall be led throughout the whole length of the unit by means of leading catch on the closing valve body and groove in the wedge, or catch on the wedge and groove in the body. Where necessary, gearing shall be provided so that the required operation force applied by hand to handwheel rim does not exceed 250N.

Extended valve rods, headstocks and foot supports shall be installed at places which require them for normal operation. Extended valve rods for all valves controlled by servomotors shall be supplied with supporting tubes between the valve and headstock to absorb pressure in both directions of operation.

All handwheels, headstocks, foot supports, guide brackets and supporting tubes shall be at least of cast iron. Permanently immersed parts and parts that are to be installed in aggressive environment shall be made of stainless steel if allowed by material construction of the controlled valve.

Footers shall be provided for larger valves.

Water Supply Closings (Discs - Gate Valves)

Closings on water supply networks shall have replaceable stem seal under pressure (under operation).

Closing seat wedge shall be guided by means of groves in valve body and plastic spindles on the wedge. The wedge shall be rubber-coated by antibacterial rubber of EPDM on all its surface, including the hole for stem.

Material specification: body, bonnet, wedge: ductile iron min. GGG 40 with heavy anti-corrosive protection according to GSK, rubber-coating of the wedge: antibacterial EPDM rubber, stem: stainless steel DIN 1.4021, stem and seal nut: brass, connecting bolt of body and bonnet: stainless steel DIN 1.4305, stem guidance: high-slide and abrasion-resistant plastic.

Closings buried under the ground shall be controlled by ground telescopic kits (control extension piece and coupling – ductile iron, extension rod – galvanized steel, pin – stainless steel, protective tube and base plate – plastic). The control extension piece shall be compatible with closing and valve spanner.

2.2.8.2. Safety Backflow Valve

Safety backflow valve shall comply with the respective valid standard. The body shall be of cast iron with two flanges of heavy anti-corrosive protection according to GSK. Size of the valve shall comply with contractual drawings.

All safety backflow valves shall suit operation in horizontal direction if it is favourable in view of operation and maintenance.

Footers shall be provided for larger valves.

Backflow Valves in Deliveries

Valves shall be placed on individual branches of pump deliveries in water-pumping stations. Backflow valves prevent reversed flow of fluids in the pipes.

Flanged check valve with free flow. Construction length of the 48 EN 558-1 line. Closing segment is a ball which stays away from the current when the fluid flows. In the design with sinking ball.

Material specification: Material construction of the valves shall be resistant against the effect of sewage waters. Body and service bonnet: ductile iron GGG 40. Sealing: NBR. Ball: aluminium coated by EPDM or NBR. Bolts: stainless steel. Surface finish: heavy anti-corrosive protection – coating the bell by epoxy powder also on the inside.

2.2.8.3. Control Pressure Valves

Control pressure valves shall comply with respective valid standard. Unless otherwise stated, control valves intended for pipe distributions to reduce, maintain or release the pressure shall be provided with two flanges of ductile iron min. GGG 40.
The valves shall be appropriately dimensioned in order to regulate the flow and pressure difference required for application; their full capacity shall be greater than appropriate for accepting the desirable max. flow rate at minimum required pressure difference.

Connection of the control circuit and application of reference pressure shall be arranged as to fulfil the requirement on pressure reduction, pressure releasing or maintaining constant pressure. Pressure gauge shall be installed to indicate the pressure.

Automatic Hydraulic Control Valves in Water Reservoirs

Automatic hydraulic control valves shall be installed on inlets and shall automatically fill water reservoirs according to water table in reservoirs. In normal operation they shall only open / close according to hydrostatic pressure in tanks that shall be transferred to the valves by means of pipe outlet from discharge piping (i.e. independently on electric power).

Automatic hydraulic control valves shall perform the following functions:

- The valve shall control filling of water reservoir in floatless manner; if maximum water table is achieved, the valve shall close for 30 seconds. When the set minimum water table is achieved, the valve shall automatically hydraulically open and fill the water reservoir.
- The operating office shall be able to open / close the valve at any time despite the current level of water table. Independent control shall also be possible directly in situ.
- The valve shall be equipped by glycerine pressure gauge of stainless steel to measure the pressure at inlet to water reservoir with closing ball valve of stainless steel.
- The valve shall be equipped by binary indicator of position linked to central control system allowing the operator to control valve opening.
- The valve shall also perform the function of backflow valve – prevention of reversed current.

Material specification: Main single-chamber valve: casing and bonnet: ductile iron min. GGG 40 with heavy anti-corrosive protection according to GSK, replaceable seat and counterpart: stainless steel AISI-316, shaft: stainless steel AISI-316, shaft bearings: stainless steel AISI-303, rubber parts: EPDM, cover bolts: stainless steel AISI-303.

Control system: control valves and filters: bronze ASTM B62, internal parts: stainless steel AISI-303 / EPDM, solenoid valves: IP 68 with manual control, backflow valves: stainless steel AISI-316, control pipes and threads: stainless steel AISI-303/316.

2.2.8.4. Air Relief / Air Inlet and Gas Relief Valves

Safety and relief / inlet valves for air and gas shall comply with respective valid standard. Air and gas relief valves shall be provided with at least two orifice plates. Inlet flange shall have the face and hole in compliance with the respective standard.

The valves shall be rated appropriately to release gas from pipes or tanks without reducing the speed of filling or flow as a result of back flow. Air shall be able to escape sufficiently quickly to avoid excessive reduction of pressure in pipes while they discharge.

Valves shall be constructed in such a way that operational elements do not get in contact with waste water.

All safety valves for air and gas and the related insulation valves shall be shop tested and able to sustain the same test pressure as the pipe or tank on which they are mounted.

Combined Impact Relief / Inlet Valve on Water Supplies

This automated combined impact relief / inlet valve shall be installed in water reservoirs and valve shafts on water supply network for automatic air inlet and relief of pipes. The valve shall let in and out great amounts of air when filling and emptying the pipes as well as rather small amount of air under normal operation.

Closing valve (closing or ball closing) shall be installed in front of each relief / inlet valve.

Relief / inlet capacity: approx. 200 l/s.

Material and construction specification:

Air relief / inlet valves shall be provided in compact single-chamber design with massive cylindrical regulation floats (of HDPE) in tube-shape body made of stainless steel with cast iron ends with epoxy coating surface finish which shall be joined by means of stainless tie rods and nuts.

Air relieving and suction (relief / inlet) shall be controlled by snapping or relief of three control floats depending on the speed of flowing air on rubber seal. Nozzle shall have flat contact surface preventing damage to rubber sealing.

The valve shall include automatically working incorporated mechanism of „anti shock orifice" which reduces pressure growth at transitional actions or shocks caused by closing to the value of max. 1.5 multiple of rated operating pressure of the valve.

Entrance hole shall be equal to rated size of the valve (e.g. a DN 50 valve shall have the entrance hole of 50mm).

Sealing of the exhaust branch shall be provided with flat face of control float against O-ring (EPDM rubber) placed in groove around the exhaust branch.

D.O.O. VODOVOD I KANALIZACIJA VIK DANILOVGRAD
STRABAG AG

Design of the valve shall ensure safety in the case of overpressure without explosive effects which are quite common when highly compressed air is being relieved. This feature shall be based on easily replaceable parts such as sealing, wads etc.

Air Relief / Inlet Gate Valve Sets on Water Supplies

To deaerate water supply pipes buried under the ground, automatic air relief and inlet gate valve set shall be used. The gate valve sets shall be installed directly on tee flanges facing upwards.

The set shall be equipped by automatic stop cone in entrance part to allow repairs under pressure (under operation).

Relief / inlet capacity: approx. 50 l/s

Material and construction specification:

Body and float of the automatic relief / inlet valve shall be resistant to corrosion (e.g. POM + bronze). The actual automatic relief / inlet valve in the ground shall be protected by a stand (cylinder) of stainless steel with HDPE cover. Connection flange and bottom part – ductile iron min. GGG 40 with heavy anti-corrosive protection according to GSK. Drainage of the set shall be ensured by drain fitting and HDPE pipe. Bolts, nuts and washers shall be made of stainless steel.

2.2.8.5. Throttles

Throttles shall comply with the respective valid standard and shall be provided with two flanges with metal or elastic bedding and body of grey or ductile iron. They shall be sealed when closed and their diameter shall not be less than rated size of the pipe.

Among stop valves, Employer's requirements include also inter-flange throttles with the design: body – ductile iron with anti-corrosive protection min. GGG 40, closing plate . stainless steel DIN 1.4301, sealing insert EPDM – if allowed by operating medium, control lever – aluminium or ductile iron.

2.2.8.6. Servo drives (actuators)

Where required, the valves shall be controlled by electric servo drives (actuators). The valves shall open with such speed that prevents unfavourable shocks in pipe distribution system when opening or closing the closing cock or valve. **Where required, the Contractor shall prove the proper opening or closing time by calculation.**

Ingress protection of actuator, including motor, shall be IP68.

Actuators shall be designed for valve operation to ensure proper function in accordance to EN 15714-2:2010 electric actuators for industrial valves - basic requirements.

Actuator settings shall be performed non intrusive via push-buttons at motor control without special tools or instruments (e.g. battery backed setting tool).

Torque-transmitting housings must be made of cast iron, except motor housing. No plastic parts of any type shall be used, except for electric / electronic components, operating knobs / levers, indicator mechanism and sealing elements as far as applicable.

D.O.O. VODOVOD I KANALIZACIJA VIK VILOVGRAD
STRABAG AG

Electric motor

Motors shall be specifically designed for valve-actuator operation, characterized by high starting torque, low stall torque and low inertia. Motors shall be totally enclosed non ventilated type (TENV). Motor-insulation must be in accordance with IEC 85 Class F (155° C). Motors must be protected by thermal monitoring device, which is embedded in motor windings.

Motors must be totally separated from lubricant-filled gearing of actuator, allowing replacement of motor without loss of lubricant regardless of mounting position.

Actuator motors must develop full torque when power is turned on. All motors shall be of high starting torque type to facilitate 'unseating' of the valve.

Actuators must be selected to provide sufficient torque required for safe valve operation. Actuator output torque must be available at 90 % of nominal voltage.

Actuator shall be capable of opening and closing the valve against full differential pressure within specified time on valve data sheet.

Limit and Torque Monitoring

No battery backed limit sensing shall be used to avoid actuator malfunction in case of power failure. Actuators shall have a hall sensor principle based absolute encoder for limit sensing with a resolution of 3° or better. Actuator shall not be equipped with a battery.

Torque sensing shall be of mechanical sliding worm principle with torque values independently setable for 'OPEN' and 'CLOSE' direction. No electronic torque sensing derived from motor current or piezo-electric torque sensing at worm shaft. Torque setting shall be possible for 40% to 100% of rated torque.

Motor and local controls

Integral motor controls shall be microprocessor based and include mechanically and electrically interlocked reversing contactors for ON-OFF duty.

Local controls shall consist of motor controls, push buttons OPEN-STOP–CLOSE–RESET, lockable selector switch LOCAL-OFF-REMOTE and LCD graphic display clearly visible under all lighting conditions with plain text and in world languages, diagnosis symbols, graphs. Indication lights, available in different color codes, showing status information such as end position open/close, torque fault in both directions and motor protection tripped.

It shall be possible to re-position local controls at every 90°, so that push buttons and indication lights will face the operator.

All control signals, communication signals as well as main power supply must be wired to a multi pin plug and socket for customer connection. Terminal compartment shall provide sufficient space to accommodate the possible maximum number of incoming wires. A minimum of three cable entries must be provided for motor power cable and digital / analogue inputs and outputs. Each cable entry shall be properly sealed by cable glands during site installation.

D.O.O. VODOVOD I KANALIZACIJA VIK DANILOVGRAD
STRABAG AG

Each actuator shall provide an adequately sized internal and external connection for grounding.

Anti-condensation heater

In order to prevent condensation, a heater must be installed inside the actuator, suitable for continuous operation. Actuator must provide an alarm signal in case of failure of anti condensation heater.

Hand wheel

Actuators must be equipped with a hand wheel for manual operation. Clockwise operation of hand wheel shall cause clockwise movement of output drive. Hand wheel shall be clearly marked with an arrow and the word 'CLOSE'.

Under manual operation, hand wheel shall drive the worm shaft. Self locking shall be maintained in hand operation. Motor must be disengaged during manual operation. Hand wheel shall automatically disengage when the electric motor is energized.

Hand wheel must be sized allowing easy manual operation of output drive. The over torque indication shall be active in manual operation as well as motor operation, thus allowing a signal to be provided when the set-torque has been reached.

Bearings and gears

Bearings shall be of antifriction or self-lubricating type. Bearings shall not require any maintenance between general overhauls. Power gears shall be made from heat treated steel. Actuator gear housing shall be filled with an adequate quantity of lubricant. Re-lubrication between general overhauls shall not be required.

Painting and corrosion protection

Actuator corrosion protection shall fulfil the requirements of EN ISO 12944-2, classification of environments C4 with a specified salt spray test of 720h. Actuator painting must be performed in such a way, that no corrosion takes place under ambient conditions as specified. All outside screws or bolts shall be made of stainless steel. Actuators shall be corrosion protected with a primer coating and a two layer powder coating consisting of an epoxy coating and a polyurethane top coating with a total film thickness of at least 140µm.

2.2.8.7. Slide Gates

Slide gates (sluices) shall comply with the respective valid standard and shall be made of cast iron or stainless steel according to specifications in Employer's requirements.

All gates shall be equipped by handwheels or gear controlled motors. Handwheels shall be placed approx. 1.0m above the floor unless otherwise specified. In the cases described in Employer's requirements the handwheel shall be equipped by an extension piece (stand). If necessary, guide brackets shall be provided.

The sluices shall be waterproof if the slope and flow direction corresponds with the respective article of Employer's requirements and/or contractual drawings.

D.O.O. VODOVOD I KANALIZACIJA NIKŠIĆ VIK
STRABAG AG

All materials used for sluice manufacturing shall comply with requirements of respective valid standards.

2.2.8.8. Filters on Water Supplies

Filters with cleaning flange and outlet drainer shall be used to remove possible mechanic impurities from water in front of water meters or regulation valves. Size of filter meshes up to DN 65 – 0.9 mm, up to DN 125 – 1.25 mm.

Material specification: filter body: gray iron GG 25 with heavy anti-corrosive protection according to GSK, mesh: stainless steel DIN 1.4301, outlet drainer: brass, bolts, washers and nuts: stainless steel DIN 1.4305.

2.2.8.9. Flanges and Universal Couplings Secured against Motion

Universal couplings secured against motion shall be used for mutual connection of free pipe ends of cast iron, steel, PVC, HDPE, GRP and concrete buried under the ground.

For transfers from free pipe ends to flange connections, flanges secured against motion appropriate for involved pipe materials shall be used.

Material specification: coupling (flange) body: ductile iron min. GGG 40 with heavy anti-corrosive protection according to GSK, sealing: EPDM, screws, bolts, nuts and washers: stainless steel.

2.2.8.10. Rubber Expansion Joints and Assembly Joints

Rubber expansion joints

In water supply network inside the building objects, rubber expansion joints made of material meeting the defined operation conditions shall be used for expansion and assembly joints.

Material specification: elastic rubber part: CIIR, flanges: stainless steel, aluminium or plastic reinforced by internal metal ring. Swing flanges and jointing material of galvanized metals are not allowed for stainless pipe distributions.

Assembly joints

The valve shall allow dismounting of the installed valve and pipes.

Material of the assembly joints shall be resistant to effects of water; to be fixed to delivery pipes by flanges.

Material specification: body: ductile iron GGG-40, sealing: asbestos-free, surface finish: anti-corrosive protection – coating the bell by epoxy powder also on the inside.

2.2.8.11. Pipe Saddles

To connect service branches within a reconstruction or when re-laying PE distribution water supply network, electric fittings of HDPE 100 shall be used – drilling T-pieces with a valve, extended branch and freely attached sleeve. Branching part shall be extended to allow repetitive welding of service branches.

Valves (gate valves) shall be controlled by telescopic gate valve sets for used T-pieces with a valve. Extension piece for control shall be compatible with gate valve and valve spanner.

D.O.O. VODOVOD I KANALIZACIJA VIK DANILOVGRAD
STRABAG

Material specification

Pipe saddles for HDPE pipes: sleeve and closing body: HDPE 100, control stem: stainless steel, bolts, washers and nuts: stainless steel, rubber sealing: EPDM.

Pipe saddles for steel and cast iron pipes: sleeves: ductile iron min. GGG 40 with heavy anti-corrosive protection according to GSK, sliding gate / closing / : forged brass, bolts, washers and nuts: stainless steel, rubber sealing: EPDM.

2.2.9. Water Meters

Water meters shall be supplied in compliance with corresponding measures of respective standards and shall be provided with respective certificates and calibration reports. Water gauges shall comply with valid legislation and be verified by authorised measuring group (proved by respective report).

2.2.9.1. Induction Flowmeters

Induction flowmeters shall be supplied in compliance with corresponding measures of respective standards and shall be provided with respective certificates and calibration reports. Water gauges shall comply with valid legislation and be verified by authorised measuring group (proved by respective report).

Supplied magnetic induction flowmeters shall contain control unit with LCD display, rubber lining, stainless steel electrode, connecting cable of required length (from the flowmeter to switchboard), at least IP 67, power supply 230V AC or after loop, output 4-20mA, 2x 0/1, defined gauge.

2.2.10. Pumps and pumping stations

2.2.10.1. General

The design shall comply with all safety directives and requirements of relevant technical standards. All rotary pumps shall be of the same brand mark. In the case that options are offered, all of them shall be of the same brand mark.

Pumps with unlimited pressure (volume type) shall be equipped by a safety pressure-relief device.

Pumps that are not resistant against dry operation shall be protected against damage by suitable measures and equipped by sensors of overheating and moisture penetration to electromotor.

Submersible pumps for waste water shall have efficient sealing between spiral case and moving wheel. Submersible pumps shall be equipped by mechanical seals, shall be self-supporting, continuously hydrodynamic lubricated and shall have varnished sealing faces. Submersible pumps installed in wet chambers shall be power-supplied by special cables delivered together with the pump and suitable for wet installation and permanent placing in water. The wiring shall be sufficiently long to allow comfortable local manipulation with the pump without the need to disconnect from the terminal box.

Waste water pumps installed in dry chamber shall also have the possibility to be submersed in the case the station is flooded. They shall have efficient sealing between spiral case and moving wheel. Pumps shall be equipped by mechanical seals, shall be self-supporting, continuously hydrodynamic ally lubricated and shall have varnished sealing faces. Pumps shall be power-supplied by special cables delivered together with the pump and suitable also for wet installation and permanent placing in water. The wiring shall be sufficiently long to allow comfortable local manipulation with the pump without the need to disconnect from terminal box.

Only materials suitable in view of corrosion and abrasion shall be used. If other materials are used, electrolytic corrosion shall be prevented.

Submersed bearings of threaded pumps or vertical pumps installed in wet environment shall be lubricated by means of special lubricating device.

Chains and chuting bars of submersed pumps shall comprise part of the delivery and shall be made of stainless steel unless otherwise specified. Chains shall be calibrated in such manner that allows direct inserting to lifting device.

Water tightness: Pumps installed in dry environment shall be tested for tightness with the pressure by 100% higher than the operation pressure or by other suitable equivalent means according to respective standard.

Pipe connection: Pipe connection for pumps with the pressure up to 0.4 MPa shall have the flange in compliance with valid standards.

Balance: All rotating parts shall be dynamically balanced.

Operation: Pumps shall comply with all designed operation conditions.

Components: All components shall allow for major repairs and all replaceable parts shall be available at hand. The delivery shall also include maintenance and repair manual and other detail documents.

2.2.10.2. Waste Water Pumping Stations

Submersible sewage pumps

Pumps shall be designed as single-staged, rotary sewage pumps for wet chambers.

Pumps shall be equipped by two mechanical seals in tandem arrangement or by combined double cassette seal.

Pumps shall be provided by humidity sensors of electromotor winding or control space and by evaluating units.

Pumps shall be driven by three-phase induction motor equipped by bimetal heat protection. Motor ingress protection IP 68, heat insulation class F (155°C). Motor shall be connected to electric distribution by means of connection cable. The cable shall be sufficiently long to allow comfortable local manipulation with the pump without the need to disconnect from the terminal box. Motor shall be suitable for permanent or intermittent operation (minimum number of starts 15x/hour).

VODOVOD I KANALIZACIJA D.O.O. VIK DANILOVGRAD
STRABAG AG

Type of moving wheel – sewage, open or half-open with permeability at least:

- 60mm (delivery DN 80 - 100),
- 100mm (delivery DN 125 – DN 400).

Pump shall be designed for vertical installation on duckfoot elbow including guiding rods. Installation on guiding rods shall allow dismounting, assembling and fixing of the pump to operational position while the tank is full without the need to discharge it in advance. Lifting chain and cables shall be secured during the operation in order not to interfere with the moving wheel. Lifting chain shall be terminated under the pump mounting cover or under duckfoot of lifting bracket.

The pump comprises also cast iron duckfoot elbow, mounting kit for the duckfoot elbow, guiding rods, upper holder of guiding rods and mounting kit for the upper holder of mounting rods.

Pumps shall be equipped by a washout valve which shall allow mixing of the sediment in pumping tank before the actual pumping starts, or by other suitable device ensuring regular self-cleaning of the pumping tank.

Material specification (unless otherwise stated in Employer's requirements):

- casing, duckfoot elbow, hydraulics – grey iron
- moving wheel – alloyed abrasion-resistant material
- shaft, rotor, guiding rods, anchor bolts, guiding rod holder – stainless steel
- mechanic seals – tungsten carbide (WC or TC)

Into pumping stations shall be installed rack bar buckets.

Sewage pumps in dry design

Pumps installed in dry chamber shall also have the possibility to be submersed in the case pumping station is flooded. They shall be designed as single-staged, rotary sewage pumps.

Pumps shall be equipped by two mechanical seals in tandem arrangement or by combined double cassette seal.

Pumps shall be provided by humidity sensors of electromotor winding or control space and by evaluating units.

Pumps shall be driven by three-phase induction motor equipped by bimetal heat protection. Motor ingress protection IP 68, heat insulation class F (155°C). Motor shall be connected to electric distribution by means of connection cable. The cable shall be sufficiently long to allow comfortable local manipulation with the pump without the need to disconnect from terminal box. Motor shall be suitable for permanent or intermittent operation (minimum number of starts 15x/hour).

Motor shall have surface cooling up to the output of 7.5 kW, or independent cooling circuit for outputs above 7.5 kW.

Type of moving wheel – sewage, open or half-open with permeability at least:

- 60mm (delivery DN 80 - 100),
- 100mm (delivery DN 125 – DN 400).

Pump shall be designed for vertical or horizontal installation on base (base shall form a part of the pump).

Material specification (unless otherwise stated in Employer's requirements):

- casing, hydraulics – grey iron
- moving wheel - alloyed abrasion-resistant material
- shaft, rotor, guiding rods, anchor bolts, guiding rod holder – stainless steel
- mechanic seals – tungsten carbide (WC or TC)

Into pumping stations shall be installed rack bar buckets.

2.2.10.3. Water Pumping (Delivery) Stations

The purpose of all pumping (delivery) stations is to increase operational pressure in water supply pipes. Pumping stations are designed as complete with full equipment including internal liner – shafts with lockable cover.

General description of pumping stations

Complete automatic pumping station with two fully stainless vertical pumps. Each motor shall be equipped by control (with various performance parameters) which includes frequency invertor, governor and control unit. The control shall be able to cover pressure losses in pipes by increasing the pressure in % of the set value of pressure. Each pump shall also have pressure sensor 0 – 16 bar. It means that all components shall have 100% backup. As a matter of course the pumps shall change the control function, have cascade connecting, automatic change-over etc.

Pumps shall be able to work in three basic modes: each pump independently, in cascade connection, in parallel operation (all pumps regulate together).

Pumping station shall further include dry operation monitoring (by means of pressure switch, conduction probe, set of water level electrodes or by software),electric switchboard with circuit breakers and main switch, pressure vessel with bag (PN 16),shared suction and delivery pipes, pressure gauges with stainless casing in shared suction and delivery pipes, stainless backflow valves and closing valves.

3. DETAILS OF TESTS REQUIRED

3.1. INTRODUCTION

Take-over of the construction within this Contract is conditioned by Employer's satisfaction that the Works or part of the Works were completed, tested, proved, they are functional and were implemented in compliance with tender documents requirements and Contract for Work. All tests shall be carried out in compliance with requirements of respective legislation and the most recent issue of valid standards in Montenegro, EN or ISO. The standard determining stricter requirements shall be considered binding.

In the case that the tests were carried out to Engineer's satisfaction and all certificates, curves etc. were checked, Engineer shall submit written approval with all tests; no device, material or other parts of the Works shall be incorporated into the Work unless such approval has been issued.

Engineer reserves the right to request the Contractor to cover all additional costs incurred due to Contractor's mistake when fulfilling these tests including the payment for certificates, curves, sub-deliveries etc. or costs incurred, in Engineer's opinion, due to insufficient care of the Contractor or sub-Contractor before the equipment was subjected to inspection or testing. If there is an unauthorised delivery, the Contractor may be requested to ensure return of such device to its manufacturer for checking and / or witnessed testing at his own expense.

The Contractor shall ensure that all sub-Contractors receive a copy of these Requirements.

Details of each testing method suggested for each element shall be submitted to Engineer.

It is considered that the tender price of the Contractor, despite the scope of specifications in individual bills, include costs on all tests including temporary works, mounting, materials, tools, storing, fuel and energy used in course of inspections and testing, sampling and laboratory analyses (e.g. on water-supply pipes) as well as costs on providing test certificates, approvals and opinions.

3.1.1. General Requirements on the Tests

The Contractor shall carry out all necessary tests to prove compliance with requirements of tender base documents and operation conditions.

The tests shall include especially:

- Testing of machine & technological and electrotechnical equipment in manufacturer's plant. Tests in manufacturer's plant shall be carried out on all incorporated equipment which shall meet the requirements and operation conditions. No equipment shall be delivered to the construction site without act of the appropriate authority or without the Engineer's approval that the tests do not have to be executed.
- Tests of all machine and electrotechnical equipment after it is incorporated and connected to control system (e.g. motors, transformers, generators, pumps, control panels, switchboards etc.).

- Water-tightness tests of gravity piping, shafts, chambers, pumping stations, tanks and all other building structures that need to be watertight.
- All other tanks intended to accumulate water shall be subjected to water-tightness testing.
- Air-tightness tests shall be carried out on all building structures where air-tightness is required.
- Gas-tightness tests shall be carried out on all building structures where gas-tightness is required.
- After the pipe distribution system is installed strength and tightness tests shall be carried out in the scope required by valid standards and regulations for the involved media.
- Pressure tests of all pressure pipes both inside and outside the buildings including the fittings and welded joints.
- Individual and complex testing shall be carried out on all machine and electrotechnical equipment and all parts of control systems in order to meet Engineer´s satisfaction and approval.

General conditions of the tests:

- General conditions valid for tests shall be applied unless other requirements related to special operation are stated in detail in these specifications.
- For non-homologated equipment the Contractor shall allow Engineer, upon his request, to participate in the equipment homologation.
- Specific tests and revisions required under this contract are specified below but if the component supplier has own process of standard tests and revisions they shall be carried out and copies of the test and revision reports shall be submitted to Engineer.
- The Contractor shall carry out extensive tests and revisions in order to prove that the equipment and its operation meet requirements of technical specifications. The Contractor shall prepare list of suggested tests and revisions including but not limited to those listed in detail in the remaining part of the text which shall be submitted to Engineer for approval. The list shall be modified if Engineer considers it necessary.
- The Contractor shall be responsible for organising tests of the whole equipment and shall notify Engineer of the dates on which the test execution is planned at least three weeks in advance. Unless otherwise stated, the Contractor shall be responsible for supply of water, energy and material required for the tests execution.
- In the case that a part of the equipment does not correspond with the specifications, the Contractor shall immediately adopt measures and replace the equipment by another one that complies with the specifications or undertake other steps that can be suggested by Engineer.
- If any component of the equipment does not pass the required tests, the tests shall be repeated in appropriate intervals and under the same situations and conditions. Any

same costs arisen to the Employer in relation to the repeated tests shall be deducted from the contract price.

- Even if Engineer informs the Contractor that he will not be present at a test, the Contractor shall carry out the testing under the same conditions that would prevailingly appear if Engineer was present. The Contractor shall send Engineer detail results of the tests in writing.
- The Contractor bears the risks and costs for all tests carried out by Engineer or the Contractor.

Employer's participation in testing:

- Before the tests commence, the Contractor shall elaborate test schedule which he shall submit to Engineer and the Employer. The Contractor shall execute all tests in compliance with the Control and Testing Plan.
- The Contractor shall announce the term of the machine equipment tests execution at least 7 days before the defined date to both Engineer and the Employer.
- The Contractor shall announce the date of piping tests at least 24 hours before the defined term.
- Apart from Engineer's presence, the Contractor shall also allow participation of the Employer. In the case that the Employer does not turn up at the defined place and time and unless Engineer orders otherwise, the Contractor can carry on with the tests.

3.1.2. Testing Materials and Equipment

The Contractor shall ensure all equipment required for the Work testing or he can execute the tests himself or ensure a skilled sub-Contractor with good reference for these works. The sub-Contractor shall be approved by Engineer.

Before each test starts, the Contractor shall provide Engineer a list of testing equipment and instruments that shall be used for the testing.

3.2. TESTS – CIVIL PART

3.2.1. Testing of the water and sewage reservoirs tightness

Water-tightness testing of all reservoirs and tanks (e.g. for pumping stations, sedimentation reservoirs, activation reservoirs, thickening tanks, digestion tanks, sludge storage tanks etc.) shall be carried out in compliance with the respective valid technical standards and legislation of Montenegro.

Leakage due to untightness shall be measured in compliance with national regulations.

If there are no national regulations, the Employer shall decide if and how shall the tests be carried out.

The tests shall be carried out before the reservoirs and tanks are put into operation. If the design prescribes application of a protective, insulation or other layer, the tests shall only be executed after the layers have been applied. The tests shall be carried out before the

reservoirs are back-filled. During the execution of tests, ground water shall be discharged from the excavation. Tests shall not be executed at the time when freeze is anticipated in order to prevent water freezing in the pumping station. All openings and passages shall be blinded. All equipment related to tightness which can affect results of the tests shall be installed before the tests commence. Tests shall be carried out by potable water or water from local sources of satisfying quality.

Testing water level shall be the highest level defined in the design.

Tightness testing of the reservoirs, chambers and shafts shall be carried out in 100 % scope.

All costs related to the above testing shall be paid by the Contractor including the costs on media, feeding pipe, pumps, energy etc.

3.2.2. Testing of gravity sewers and branch sewers tightness

Tightness testing of gravity pipes shall be executed in compliance with standards valid in Montenegro, European standards EN or system standards ISO. The standard determining stricter requirements shall be considered binding.

To test the tightness of gravity pipes incl. the branch sewers, manholes and inspection chambers European standard EN 1610 "Construction and testing of drains and sewers" is provided.

The standard does not apply to testing of internal sewerage, open sewers, pipe sewers with pressure and under-pressure flow and for large structures on sewers (e.g. storm tanks).

Sewer sections which have not been back-filled yet shall be tested. Pipes shall be protected against shifting, if necessary, the pipes may be partly or fully back-filled – however, the connections shall remain visible.

Tests can be executed by:

- Water, or
- Air

If the prescribed test cannot be executed by water or air (e.g. in the case of special profiles or after reconstruction), other test methods may be utilized to prove the tightness (e.g. testing by smoke). Combination of water and air testing is allowed, e.g. sewers may be tested by air and shafts including branch sewers by water.

The test method shall be determined by the Employer.

Testing by air (method "L")

Duration of pipe testing with the exclusion of manholes and revision chambers depends on the pipe diameter and the testing method. Air-testing of manholes and revision chambers is difficult to perform in practice. To avoid errors caused by testing equipment, suitable air-tight covers shall be used. Instruments used to measure pressure decrease shall allow measuring with the accuracy of 10 %.

Initial over-pressure by approx. 10 % higher than the required testing over-pressure p_0 shall be maintained for approx. 5 minutes. Then the pressure shall be set to testing pressure defined by the standard. The pipe complies when the pressure measured after the test decreases less than by the pressure difference defined by the standard (Δp).

Testing by water (method "W")

Preparation

Sewers shall be water-tightly closed on both sides of the tested section as well as in connecting points of gullies and sewer branches. Endings and elbows shall be sufficiently secured against the strengths arisen during testing. When filling the pipes, creation of air pockets shall be prevented in the tested section. That is why the sewers shall be filled slowly to allow discharging of air through sufficiently big air valve or through the shaft on the upper end of the pipe. Therefore enough time shall be reserved for preparation and execution of the test. The sewers shall also not be damaged by over-pressure or in result of water hammer.

Testing pressure

Testing pressure is the pressure equal/implied by filling the tested section up to the ground level by the manhole located down-stream (in exceptional cases up-stream) with the maximum pressure of 50 kPa and minimum pressure 10 kPa measured on the top of the pipe. Higher testing pressures may be prescribed for pipes designed to operate under higher pressures.

After the pipe is filed, conditioning (adjustment) may be required. One hour is usually sufficient; longer period may be required in dry climatic conditions.

Duration of the test

Prescribed duration of the test is (30 ± 1) minutes.

Variation of the pressure within the testing shall not exceed 1 kPa in comparison to the prescribed testing pressure.

Requirements on testing

The amount of water added during the testing in order to maintain the prescribed pressure shall be measured together with the hydrostatic pressure of water and the required testing pressure. Testing requirement is met if the amount of added water does not exceed:

- 0.15 l/m2 in 30 minutes for pipes
- 0.20 l/m2 for pipes including the manholes
- 0.40 l/m2 for manholes and revision chambers

related to the inner wetted surface.

Testing of individual connections

Unless otherwise stated, individual connections may be tested for pipes greater than DN 1000 mm instead of testing the whole piping. In these cases, unless otherwise stated, the

area representing 1 m of the pipe length is taken into account. Testing requirements are identical with those described above with the testing pressure of 50 kPa measured on top of the pipe (at the shaft).

Technical requirements

After the tests for water-tightness are terminated, testing water from the tested section of the sewer shall be safely discharged to avoid flooding or other damages to the down-stream section or to the water receiver or to avoid negative impact on the waste water treatment plant.

If the tests for water-tightness prove that the sewer does not comply with provisions of the standard, faults shall be removed after their cause is detected and the tests shall be executed again.

Test report shall be elaborated for each executed test for water-tightness according to the selected method and regardless on the test result.

Apart from the tests, the Contractor shall carry out monitoring of all gravity sewer networks comprising part of the Contract. The monitoring shall be provided by industrial camera to Engineer's satisfaction. If the monitoring proves implementation discordance with tender documents, the Contractor shall implement all required repairs on their own expense.

Tightness testing of gravity sewers and sewer branches shall be carried out in 100 % scope.

All costs related to the above testing shall be paid by the Contractor including the costs on media, feeding pipe, pumps, energy etc.

3.2.3. Testing of sewerage delivery pipes tightness

Tightness testing of all delivery pipes on the sewerage shall be carried out according to Montenegrin valid standards, EN or ISO.

See chapter 3.2.5. Pressure testing of water pipes.

3.2.4. Ovality testing

Pipe testing for ovality is carried out in order to detect deformation of pipes after the compacted back-fill is provided according to Employer's requirements and according to appropriate legislation of Montenegro.

Maintaining of circular cross-section is deduced from digital camera recording as it allows random execution of accurate check of connection deformations that might show the proved ovality.

Calculation of the pipe ovality is described in the European standard EN 13 508 "Conditions of drain and sewer systems outside buildings".

Calculation result is a value in percents stating by how many percents the cross-section is deformed compared to 100% state of the pipe (circular cross-section without any damage).

Measuring and subsequent calculation of the pipe ovality are conditioned by quality equipment of the company.

Pipe ovality is measured and calculated especially on plastic pipes.

Camera monitoring shall be carried out in the whole scope of implemented pipes.

3.2.5. Pressure testing of water pipes

Pressure tests shall be carried out within the meaning of the most recent issue of standards valid in Montenegro, EN or ISO. The strictest requirements shall be the binding ones.

European standard EN 805 "Water supply - Requirements for systems and components outside buildings" is binding for pressure pipe testing.

The subject of the EN 805 – apart from general requirements on outdoor water distribution networks – is their execution, testing and putting to operation.

Another European standard EN 806-4 "Specifications for installations inside buildings conveying water for human consumption - Part 4: Installation" defines the requirements and provides recommendations for mounting of indoor water distributions and pipes outside the buildings located within the premises according to EN 806-1, sets the conditions for putting it into operation, filling and pressure-testing of indoor water pipes and flushing and disinfection of water pipes.

Pressure tests of these pipes are a process limited in time examining correctness of the embedded pipes; alternatively, potential defects of the piping which could have appeared during transport or embedding to the ditch are detected.

Pressure tests are carried out depending on the type of device generating the pressure by:

- Water
- Air under water (pipes under the water table)
- Air

The testing is carried out according to the following procedure:

- Test preliminaries
- Filling the pipe
- Pre-testing
- Testing

3.2.5.1. Test Preliminaries

<u>Identifying pipe section which shall be tested</u>

Part of the pipe section which shall be tested depends on topography, pipe dimension, difference of levels, pipe type and other conditions. Maximum length of the selected part of tested pipe shall not exceed 500 m.

In the case of great difference of pipe levels, such pipe section shall be selected that testing in the highest point of the pipe reaches at least the working pressures. Test pressure in the lowest point of examined pipe shall not exceed 1.5 multiple of the working pressure value.

Pipe support and anchoring

Before the filling starts, pipe shall be supported at both ends. Sharp bends, endings, connecting sections and valves should be secured in concrete anchoring blocks within the pipe bedding.

Size and anchoring of the supports depend on horizontal forces affecting the connection part and on permissible specific pressure of surrounding soils.

Permissible reference load of the ground in the depth of 60 cm for various types of soils is listed in the following table:

No.	Type of soil	Permissible load
1.	Marshy bottom, mud	0.00 kp/cm^2
2.	Soft soil	0.25 kp/cm^2
3.	Sand	0.50 kp/cm^2
4.	Gravel and sand	0.75 kp/cm^2
5.	Firmly adherent gravel and sand	1.00 kp/cm^2
6.	Stone sand, shale, soft rock	2.50 kp/cm^2

Pipe support at ends shall only be removed in the last phase of support removal.

3.2.5.2. Filling the Pipe

Filling the pipe with water

Pipe shall be filled with clean water in order to remove all air. It is especially important in such topographies where the pipe gradient goes up and down in turns. Discharging of air is necessary as its potential presence in the pipe could negatively affect water flow and the pressure test results.

Setting the pump pressure

Pumps for the test shall be located in such places that allow the operators to safely manipulate with them. Safety of workers carrying out the actual pipe testing shall also be ensured.

Measuring the pressure

The pressure shall be measured by pressure gauges with the scale allowing readings of as small pressures as 0.1 kp/cm2.

Reference pressure gauge shall be mounted in the lowest point of tested pipe section. Main pressure gauge shall be placed in immediate proximity of the pump where the analysis is executed.

Group of assembly men shall be present while the pipes are tested for pressure. It is also required that all persons authorised to sign the report on executed pressure analysis shall participate in the testing.

For safety reasons, no one is allowed to be in the ditch of the tested pipe section during the testing.

3.2.5.3. Pre-testing

After the pipe or its part is filled, it shall be loaded with the working pressure. Discharge the possible remaining air through air valves. The pressure shall decrease while the air is being discharged and after the discharging is finished, it shall be raised back to the working pressure level.

Check all connecting points and remove possible defects; then repeat the pre-testing.

The pre-testing shall last 12 hours. Every 2 hours, the pre-testing pressure shall increase up to the working pressure.

The highest testing temperature is considered to be 20 °C.

With regard to the fact that the pipe volume increases during the first 12 hours of keeping the pipe under pressure, water shall be refilled.

3.2.5.4. Testing

Testing pressures

Testing pressures are defined for pipe analyses.

In the case of air testing or air testing under water, the testing pressure is pi = 0.6 p.

If tested by water, the testing pressure is pi = 1.5 p

where p is the testing pressure.

The following table shows permissible pressures for pipe analyses for various types of pipes:

Working pressures for pipes (bar)	**Permissible pressure for pipe testing (bar)**	**Permissible pressure for pipe testing (bar)**
	Testing by air or air under water	Testing by water
6.0	3.6	9.0
10.0	6.0	15.0
16.0	9.6	24.0

When tested by air, the pipe is considered air-tight if the tested pressure remains constant for the period of 1 minute.

When the test is carried out by air under water, the pipe is considered air-tight if the tested pressure remains constant for the period of at least 2 minutes and no bubbles form in the water.

Types of pipe tests

The term "pipe analysis" describes

- Partial testing
- Main testing

Examining a part with interconnections up to 500 m

- Before the actual testing starts, pre-testing shall be carried out
- The test starts 2 hours after the last increase of pressure in course of the pre-testing phase
- The test lasts 30 minutes for each subsequent 100 m long pipe section but not longer than for 2 hours
- Joints shall be examined in course of 2 hours
- After the joints of the pipe or its part are examined, the pipe or its part shall be loaded with working pressure (1.5 p for testing under water)
- The pipe is considered to be tight if the pressure decreases within the last 30 minutes without re-increasing
- Up to 0.2 kp/cm2 per 1 hour

Main testing

- The purpose of main testing is to test pipe joints between individual parts of the pipe. It also serves as a load test of the whole structure before it is handed over from the Contractor to the Employer.
- Permissible test pressure for the pipe main test is 1.3 multiple of the working pressure.
- Pipe testing lasts at least 2 hours.
- The testing terminates in the moment when it is stated that all joints between tested parts of the pipe are tight.

3.2.6. Pressure test recording

Pressure tests shall be documented in the log; notebook shall also be kept where the following data are recorded:

- Number and date of the record
- Structure
- Project
- Employer
- Executor of the works
- Responsible authority

3.2.6.1. Pipe Description

- Symbol of water, type, location
- Number and location of the examined part or the appropriate pipe
- Type of joint, connecting parts, joint number

3.2.6.2. Pipe Test Information

- Type of the test (short, partial, main)
- Place where the pressure gauges are installed and their static head
- Prescribed test pressure at the point of pressure gauge installation for pressure pre-testing and testing
- Permissible decrease of the pressure due to pipe expansion
- Recommended duration of the test
- Real pressure read on the pressure gauge
- Real duration of the test
- Declarations stated on pipes, connections and valves
- Repeating of the pressure test
- Comments on handing the pipe over at the main test

3.2.6.3. Notebook Annexes

- Draft or drawing of the examined part or the appropriate pipe
- Draft or drawing of longitudinal part or the appropriate pipe
- Note about the pipe and connecting part manufacturer

3.2.6.4. Signatures of Authorised Persons

- On behalf of the executor
- On behalf of the responsible authority

Costs caused by the Contractor shall be at the expense of the Contractor.

Tightness testing of water distribution pipes shall be carried out in 100 % scope.

All costs related to the above testing shall be paid by the Contractor including the costs on media, feeding pipe, pumps, energy etc.

3.2.7. Individual Testing

All parts of the equipment shall be tested in-situ after installation. Individual testing comprises part of the assembly of technological equipment.

Revision of Machine Equipment

The Contractor shall subject each installation and each element of mechanic operation to revision in order to verify that they comply with the relevant specification, design, manufacturer's drawings and material and manufacturing standards.

As soon as the Contractor is content that the operation meets all requirements he shall invite Engineer to execute his own revision. Any faults detected within this revision shall be notified to the Contractor and remediated to Engineer's full satisfaction.

Revision of mechanic operation shall include but not be limited to the following items:

- Identification plates, sound fixing, no physical defects etc.,
- All warning tables, protective equipment and covers,
- All fixings and lockable devices,
- Installation of sealing wads and lubrication of cocks and small machine equipment, checking of rotary drives,
- Machine equipment and drivers setting,
- Pipes and supports,
- Surface protection,
- Manually executed functional tests.

Preliminaries to complex testing

- The Contractor shall ensure functional testing of the whole equipment in order to secure that it works correctly within the electro-mechanic activity before complex testing commences. Functional tests shall include checks of all protective equipment and calibration and setting of the equipment in order to comply with specific requirements on the construction site or meet the operation parameters. The purpose of these tests is to simulate control of the system. If control interface cannot be used, the Contractor shall request simulated signals to allow testing of individual sequences.
- After the tests and revisions of the equipment are finished successfully as stated in these specifications, the Contractor shall put the whole equipment into operation as it would work under full operation conditions before complex testing is carried out.

Pumping station

- Apart from demonstrating proper functioning and checking of each pumping system element, operation of the pump on the construction site shall be tested. Delivery of pumps shall generally be measured by the volume of fluid pumped from an inlet source. If this method cannot be used, it is allowed to carry out other measuring tests of the performance or flow-through tests.
- The Contractor shall carry out hydrostatic testing of all parts of piping before their final painting and covering of supportive plinths, pressing blocks etc.
- Pumping station shall not be put into use until the above mentioned tests are completed and appropriate certificates issued in compliance with valid regulations.

Lifting devices

- The Contractor shall carry out revision and tests of all delivered lifting devices and confirm that they are safe and in compliance with relevant standards. Certificates for load tests shall be issued both for the Work and for the load tests in situ. The Contractor shall provide all necessary testing loads.

- Lifting devices shall not be put into use until the above mentioned tests are completed and appropriate certificates issued in compliance with valid regulations.

All the above individual tests shall be executed to Engineer's satisfaction before the complex tests commence.

3.2.8. Complex testing

Complex tests shall be carried out on completed Work or parts of the Work in compliance with valid standards and legislation of Montenegro. Terms, places and methods of the tests shall be approved by Engineer. Unless Engineer instructs otherwise (e.g. for operation reasons), complex testing shall last 72 hours of continuous operation with the use of substitute media (pure water) before the Acceptance Report is issued.

Before the Acceptance Report is issued, Employer's personnel may only operate the Work under Contractor's supervision and the Contractor shall be fully responsible for Work operation throughout the complex testing.

Scope and content of complex testing including requirements on cooperation between the Contractor and the operator shall be defined in the "Draft and Preliminaries to Complex Testing" elaborated by the Contractor. Details of the Draft of Complex Testing and Program of Complex Testing suggested by the Contractor shall be submitted to Engineer for approval six weeks before the tests commence. These documents shall apart from the above test report also include Service and Handling Regulations as well as the respective technical drawings and test results for the equipment signed by the Contractor and Engineer. Service Regulations shall be elaborated by Contractor's designer. The Contractor shall be obliged to provide the designer with all required documents.

During the complex testing the Contractor shall prove to Engineer's full satisfaction especially the following:

- The completed Work is in full compliance with Contract provisions including and any changes approved by the Employer and incorporated into the technological equipment and the materials are suitable for their intended use,
- The Work or parts of the Work are prepared for operation in compliance with parameters prescribed by competent authority including the limits allowed throughout the validity of permit for temporal use of the construction.

Complex testing may not start until the whole Work or parts of the Work are properly prepared for such tests. Schedule of starting up individual technological units and complex testing schedule shall be included in work schedule.

Within the testing all parts of the equipment and materials shall be tested to prove their compliance with the specifications at both automatic and manual operation.

Engineer shall be present at all tests with the exception of cases when Engineer does not wish to participate in the testing. In such case the Contractor may carry on with the works and/or tests.

The Contractor shall collaborate with Engineer throughout the whole testing and shall provide Engineer all the information he requires. The Contractor shall submit to Engineer report on the course of complex testing. The report shall include at least: beginning and end of the tests, persons who were present at the tests and short description of the tests of each device.

In the case that during the tests in turns up that the Work, products, materials or quality of works do not comply with contractual requirements, the Contractor shall, at his own expense, ensure appropriate modifications or repairs as well as the repeated tests.

The Contractor shall ensure such course of the tests as to avoid serious pollution of the environment and especially recipients in consequence of the tests. In the occasional cases when it is proved to be impossible due to the operation reasons, the Contractor shall notify this fact to Engineer. The Contractor shall also ensure that no sludge, filtrate, condensate or other waste waters or substances are discharged to recipients in the consequence of testing procedures.

As a part of completing of the complex tests, the Contractor shall issue Service Regulations for operation. These Service Regulations shall be submitted for approval to the Employer, operator and the competent authority including all annexes (e.g. description of ACSTP structure and algorithms) not less than 30 days before the operation starts.

The costs related to all tests carried out during the individual and complex testing including the cost of equipment and operation of testing devices, regardless whether the tests were carried out at manufacturer's plant or on the construction site and including all media (energy, water, sludge, chemicals) shall be charged to the Contractor in compliance with provisions of the Contract terms.

3.2.9. Operators' training

Before the operation the Contractor shall ensure training of operators in the scope required for operation of the Work put to operation and including the OHS training. Specific record shall be taken about this training.

Training of Employer's (operator's) personnel shall be included in the offer. The goal of the training is to ensure that selected Employer's (operator's) workers acquire the necessary knowledge on the installed technology, operation and maintenance of all the equipment included in the project with the aim to secure proper long-term operation and maintenance of all parts of the Work. The training shall take place before the approval proceedings.

Contractor's training for each type of work shall generally cover: knowledge of the whole system and proper operation of the installed technology, operation and maintenance of machines and equipment, quality control and safety measures.

The training shall generally include introduction of all aspects of the systems operation as a whole and also introduction of all specific items of the equipment. The training shall be provided on the particular equipment and shall include implementation of operation and maintenance programs described in the Service Regulations and in the Maintenance Manuals provided by the Contractor.

D.O.O. VODOVOD I KANALIZACIJA DANILOVGRAD
STRABAG AG

The training shall also focus on specific requirements of the operation though the instructions and introduction for various involved workers will differ with respect to their abilities; it shall be anticipated that the workers will require highlighting of different aspects.

All trainings shall be successfully completed and declared before the respective part of the Work is subjected to operation. If, due to the work development and daily operation of the equipment and systems, it is required to put any of the systems or equipment to Employer's (operator's) operation before the works are completed, the Contractor shall be responsible for providing all necessary instructions and training to Employer's workers in such manner that they understand the technology and operation.

The Contractor shall provide training materials for everyone and audiovisual aids including the notes, diagrams, films and other training aids required to allow attendance of later repetitive courses for self-taught persons.

The costs related to operators' training including the preparation of training material shall be charged to the Contractor in compliance with provisions of the Contract terms and conditions.

3.2.10. Trial operation

Trial operation isn´t required.

3.3. TESTS – MECHANICAL AND ELECTRICAL PART

3.3.1. Tests in Manufacturer's Plant

3.3.1.1. General

Testing of the works and equipments shall be executed on all devices which shall be delivered before dispatching from manufacturer's plant; if it is not possible, Engineer shall be informed. Engineer shall be informed at least 21 days in advance that these tests are going to take place in order to be able to participate in the testing if he considers it necessary. Price of the equipment testing in manufacturer's plant shall be included in the price of the equipment delivery.

In the case that Engineer decides to participate in the testing, all tests shall be carried out in mutually agreed terms within 7 days from the originally defined date and shall be performed at Engineer's presence and to his full satisfaction.

In the case that Engineer decides not to participate in the testing, the Contractor shall ensure that the tests will be provided by his testing laboratory to allow issuing of Report on executed tests.

Each element of the equipment which shall be fully tested shall be located in such place and tested in such manner that are as close as possible to the conditions on the construction site.

Detail descriptions of executed tests shall be included in appropriate control plans.

3.3.1.2. Electric motors

Type testing of each motor according to relevant technical standards shall be provided by the motor manufacturer. Before each motor is delivered to the construction site, it shall be

subjected to regular checking test. Motors shall be equipped by performance type plate with the information complying with requirements of relevant standard.

3.3.1.3. Witnessed pump tests

The Contractor shall prove that guaranteed data regarding the performance, input in kW, total efficiency etc. listed in technical specifications are met by each pump unit. It shall also comply with all Engineer's requirements in view of mechanical reliability of the equipment and its ability to fulfil all required characteristics.

It is usually required that all electric motors really delivered within the equipment according to the Contract are tested in manufacturer's plant and the results regarding efficiency etc. achieved during the motor testing shall be used for calculation of the equipment total performance.

If alternate current (AC) of the required voltage is not available at manufacturer's plant, the equipment shall be tested in compliance with Contractor's standard or by means of a calibrated testing motor but the Contractor shall meet Engineer's requirement that the test data for his machine are accurate in order to be able to define precise efficiency of the equipment.

The tests shall comply with relevant technical standards. Tests of measuring and control devices (measuring of flow, pressure etc.) shall be carried out with instruments or devices with the accuracy at least one order higher than accuracy of the calibrated devices.

Electric instruments which should measure input to motors, voltage and supply frequency shall be calibrated by an independent test within 12 months before the test is carried out and verification of the calibration shall be available for checking throughout the testing period. Engineer shall have the possibility to replace Contractor's instruments by his own ones which have the appropriate certificates as mentioned above.

3.3.1.4. Hydraulic pressure tests

All fitting pieces, cocks, pipes and any other elements of the equipment in manufacturer's plant which are subjected to pressure shall be hydraulically tested for maximum operation pressure defined by relevant standards and the prove that these elements were tested shall be submitted to Engineer.

3.3.1.5. Materials and instruments

All materials used for equipment manufacturing and all instruments that comprise part of the equipment shall be soundly tested in manufacturer's plant. Engineer shall be informed about the planned tests in order to have the possibility to participate in them. If Engineer requires, the Contractor shall send him signed verification of the tests and provide him all requisites regarding these tests as well as verification that they were successfully executed.

3.3.1.6. Control panels and switchboards

Testing of control panels and switchboards in manufacturer's plant shall be carried out in compliance with the list of suggested tests and checks approved by Engineer. Individual

elements as well as the whole system functioning shall be tested. If control interface cannot be used, simulated signals shall be utilized. Number of simulated signals shall be minimized.

3.3.1.7. ACSTP and SCADA

After creating the control algorithm of technology, application software of PLC and HMI, visualization of supervisory control and data acquisition (SCADA), and other application program functions shall be tested and demonstrated the full functionality of the system and compliance with the requirements contained in this Tender dossier.

SCADA testing shall focused besides other things on:

On individual structures:

- Testing of software for technology control and local visualization (control algorithms)
- Checking the functionality of each input / output of each PLC and speed of display PLC input / output status changes on the HMI
- Checking the functionality of the control algorithms and ability to correctly respond to all operating states of technology.
- Checking and diagnostics of data connection to the control center (check connection speed, connection capacity, response time, etc.).
- Checking and diagnostics of data connection with follow-up objects (check connection speed, connection capacity, response time, etc.).
- Checking of the control algorithms autonomy of individual objects - if the data connection to the dispatching is not available, the control algorithms shall control the technology based only on available informations (for example peer-to-peer communication with follow-up objects) or should safely put the technology out of operation.
- Control algorithms optimization and tuning to avoid unnecessary network traffic.

At the dispatching:

- Checking of completeness and functionality of individual objects visualization (display of all detailed and updated informations of individual devices, machines and measured values).
- Checking the functionality of graphic presentations of regulated devices and relevant process parameters, display of alarm and incident history, graphic display of historic and real-time trends.
- Checking the WEB server functionality.
- Checking the hardware functionality.

Training:

Contractor shall prepare a detailed manual, which shall include a detailed description of the work activities and procedures for workers with SCADA system at various work levels. In the manual shall also be given a detailed description of each feature and of all the controls of the program (program menu and toolbars).

Contractor shall prepare a detailed clear and graphic instructions for individual screens and visualization schemes editing and modifying, or the creation of new screens and visualization schemes.

Contractor shall perform detailed training for Employer's workers of all work levels who come into contact with SCADA system both in the field (at a remote structures) and in the office (an electro technician in the field, electro engineer, mechanical engineer, technologist, dispatcher, IT technician, manager etc.).

3.3.2. Testing on the construction site

General

The Contractor shall carry out all necessary tests on the construction site under operation conditions in order to verify compliance with specifications to Engineer's full satisfaction. At least the following tests and revisions shall be executed:

- **Individual tests** – tests of individual building structures, machines or equipment in the scope required to check their completeness, functions and properly provided assembly. They comprise a part of assembly works and are included in the Tender Price.
- **Preliminaries to complex testing** – works required for individual testing in order to allow complex testing. They shall be included in Tender Price.
- **Complex testing** – works required to test groups of machines and equipment in mutual connections to prove that the delivery is able to enter the operation. They shall be included in Tender Price.
- **Trial operation** – isn´t required.

Test conditions

- All works, materials and equipment for testing on the construction site shall be ensured by the Contractor.
- 21 days before the tests on the construction site start, the Contractor shall issue all details and program of suggested tests to be approved, and allow Engineer 14 days to comment or approve them. If Engineer considers these tests insufficient to prove the appropriate state, additional tests shall be carried out upon his instructions and their execution shall be at the expense of the Contractor. Tests on the construction site cannot start unless Engineer provided written approval to them.
- Engineer reserves the right to be present at any test or commissioning and shall confirm his intention by approval (or reservation). Should the tests be witnessed by Engineer, the Contractor shall inform him 14 days in advance about the date and place of the test execution.
- The Contractor shall be responsible for program coordination of all parts on the construction site and for ensuring that all involved parties will be present during the testing.
- The Contractor shall ensure that operation of any existing equipment is not disturbed in any way. Final discharge from the new operation which would not meet the quality standards will not be allowed. The Contractor shall be responsible for ensuring temporal pumps, cocks, pipes etc. necessary to meet this condition.

- When carrying out the tests, the Contractor shall be responsible for overall safety measures related to this equipment and shall ensure that none of the people will be directly or indirectly exposed to any danger.
- The Contractor shall ensure revision certificate for the whole electric equipment and wiring before individual testing.
- The Contractor shall provide a check list accompanied by results and types of executed activities in order to eliminate errors. This check list shall be signed by Engineer as verification of the test execution.
- If, according to Engineer's interests, the tests on the construction site are delayed without proper reason, he can instruct the Contractor in writing to prepare them. If the tests are not carried out within 10 days from receiving this notification, Engineer may start to execute them on his own. All costs related to execution of these tests shall be borne by the Contractor.

4. DETAILS OF ALL WORK REQUIRED TO ACHIEVE COMPLETION

4.1. PARTICULAR REQUIREMENTS – CIVIL PART

4.1.1. Recapitulation of existing situation and designed scope of works

4.1.1.1. Existing situation

Within the Danilovgrad centre, a sewerage system was constructed only in some areas, mainly in streets with apartment blocks and institutions. Approx. 2,073 inhabitants are connected to the existing sewerage system, while 3,115 inhabitants use septic tanks for the wastewater disposal. The operation of septic tanks and seepage wells is not satisfactory due to the occurrence of clayish soils, high groundwater, poor maintenance, and irregular disposal of sewage sludge, leading to the clogging of wells even in a porous ground.

The existing sewerage system is formed by three separate drainage basins with wastewaters being discharged directly into the Zeta river in the shortest way.

1) The largest section of the system is the drainage basin belonging to the "Landža" drainage outlet, covering the southern part of the centre, with sewers Ø 150-400 mm.

2) The second section of the sewerage system is within the drainage basin belonging to the "Staion" outlet, covering the stadium area, with sewers Ø150-200 mm. It should be noted that apartment blocks were connected to the system through septic tanks.

3) The third section of the system is in the drainage basin belonging to the "Pažići" outlet, covering a smaller area on the left bank of the Zeta river, with sewers Ø150-300 mm.

It should be emphasised that the existing sewerage system covers only a minute part of the Danilovgrad centre.

A larger part of the sewerage system was constructed in the past 35 years. In the 70's especially fibrocement was used, in the 90's s PVC material started to be used. The total length of the existing sytem is 3,171 m, the following diameters and materials were used:

Existing sewerage system		
Diameter (mm)	Material	Total length (m)
Ø 150 mm	Fibrocement	460.50
Ø 200 mm	Fibrocement	819.50
Ø 250 mm	Fibrocement	124.50
Ø 300 mm	Fibrocement	459.00
Ø 400 mm	Fibrocement	166.00
Ø 200 mm	PVC	426.50
Ø 250 mm	PVC	715.00
Total length of the system		**3,171.00**

D.O.O. VODOVOD I KANALIZACIJA DANILOVGRAD VIK
STRABAG AG

The existing system's gradient is between 0.07 and 8.18 %.

In some sections, the existing sewerage system is irregularly maintained and some manholes are damaged or destroyed, without covers and step irons; some sections are even filled up with soil or debris. Some sewer sections are constructed too shallow.

In the late July/early August 2007, flow measurement in individual outlets was performed with the following results:

"Landža" outlet, fibrocement sewer Ø 400 mm

7:30 - 8:00 am	2.8 l/s
12:30 - 1:00 pm	2.8 l/s
4:00 - 5:00 pm	3.3-4.1 l/s

"Stadion" outlet, fibrocement sewer Ø 200 mm

7:30 - 8:00 am	0.4-0.5 l/s
12:30 - 1:00 pm	0.4-0.5 l/s
4:00 - 5:00 pm	1.0 l/s

"Pažići" outlet, fibrocement sewer Ø 300 mm

7:30 - 8:00 am	0.6 l/s
12:30 - 1:00 pm	0.6-0.7 l/s
4:00 - 5:00 pm	0.9-1.1 l/s

Apart from the sanitary, or combined sewerage, there is also a storm sewerage in one area of the town, consisting of three main sewers. The main sewer runs through Baje Sekuliča Street, opening nto the Zeta river; the second main sewer opens opposite the main sewer on the other side of the river. Both sewers are made of bricks, 100x70 cm. The third sewer, running along the "Crnagorakop" structure, is constructed of fibrocement with Ø 800 mm.

Sanitary wastewaters from some structures are connected to the storm sewer directly or through a septic tank. Since a separate sewerage system is designed, it is necessary to separate the storm sewerage from sanitary sewerage.

4.1.1.2. Designed scope of works

The main objective of the project is to provide a sewerage system for the Danilovgrad agglomeration by constructing separate sanitary sewerage, especially in those town parts in which there is no existing sewerage, and by collecting wastewaters in the Danilovgrad WWTP.

Plots for the sewerage system construction shall be provided by the Employer. Costs of the plots purchase or lease shall be reimbursed by the Employer.

The Danilovgrad agglomeration area has been divided to ~~7~~ complexes stated below:

1) Sewerage system – zone 1: ~~reconstructed existing sewerage system,~~ connection of the existing sewerage system
2) Sewerage system – zone 2: connection of the priority areas (army barracks, hotel)
3) Sewerage system – zone 3: connection of the downtown
4) Sewerage system – zone 4: connection of the areas with population density 250-150 inha/ha
5) Sewerage system – zone 5: connection of the areas with population density 150-100 inha/ha
6) Sewerage system – zone 6: connection of the areas with population density 100-50 inha/ha
7) Sewerage system – zone 7: connection of the areas along the trunk road
~~7)~~8) Reconstruction of existing sewerage system

Schematic map of the sewerage system

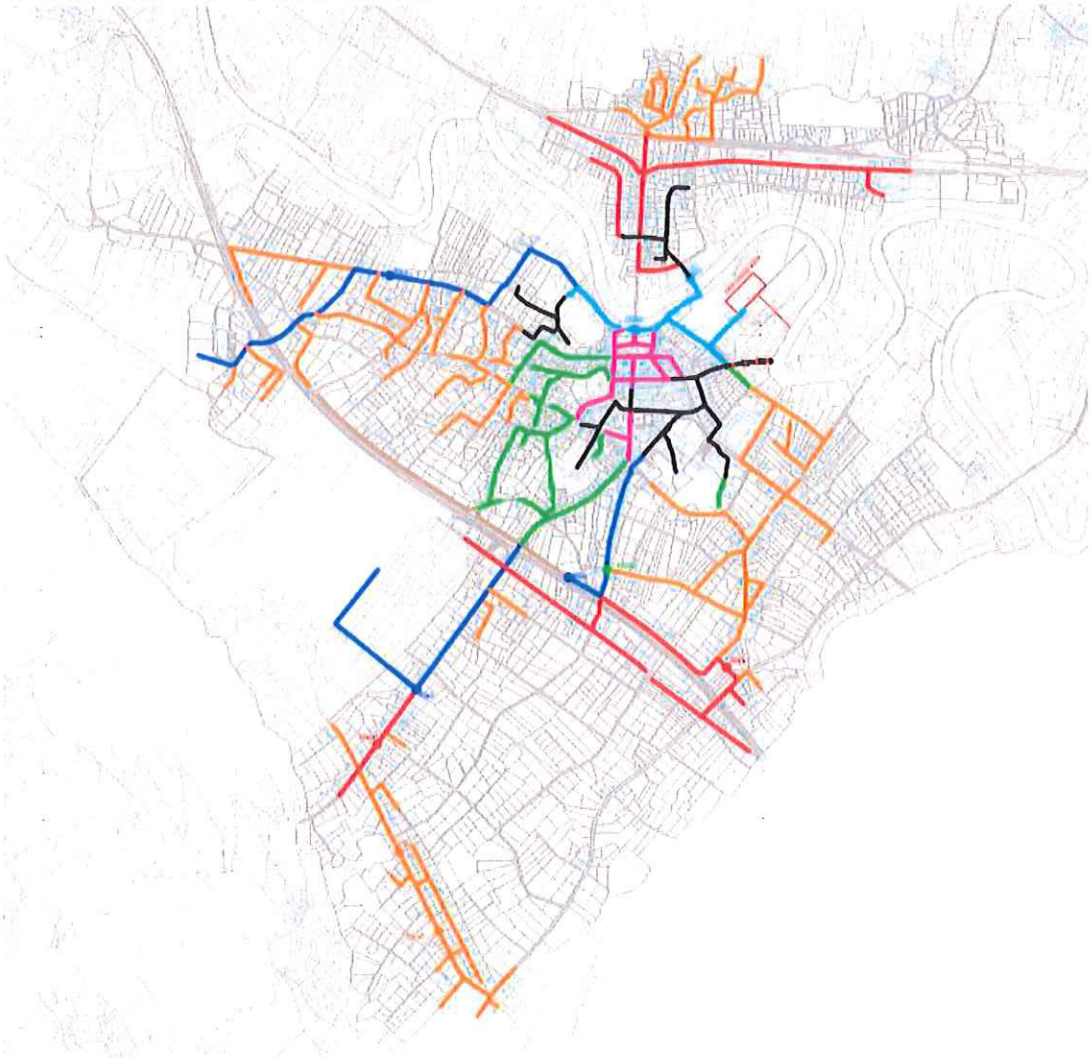

The table below contains the recapitulation of the existing situation and requirements on the new situation after the construction works realisations. More detailed information is given in Chapter 4.1.2.

SO PS	Component	Existing situation	New situation requirements
Sewerage System			
Sewerage system – zone 1			
~~SO~~	~~Sewerage system reconstruction~~	~~Pipes of combined sewerage in bad conditions, inadequate capacity~~	~~Construct a new sewer and reconnect connections~~
SO	Sanitary sewerage	Part of the agglomeration without sanitary sewerage, collection in septic tanks	Provide wastewater collection in the agglomeration part by a sanitary sewerage and connection to WWTP
SO	House connections	Connection to septic tanks	Construct a quality connection of public sections of connections from individual houses
SO	LV connections	None	Permanent safe and reliable power supply of every pumping station, energy consumption measurement
SO	Pumping stations	None	Provide pumping of wastewaters through a fully automatic system into a gravity system
PS	PS – mechanical part	None	Complete mechanical-technological installation for a system of the newly constructed pumping stations
PS	PS – electrical part	None	Complete technological electrical installation for a system of the newly constructed pumping stations
Sewerage system – zone 2			
SO	Sanitary sewerage	Part of the agglomeration without sanitary sewerage, collection in septic tanks	Provide wastewater collection in the agglomeration part by a sanitary sewerage and connection to WWTP
SO	House connections	Connection to septic tanks	Construct a quality connection of public sections of connections from individual houses
SO	LV connections	None	Permanent safe and reliable power supply of every pumping station, energy consumption measurement
SO	Pumping stations	None	Provide pumping of wastewaters through a fully automatic system into a gravity system
PS	PS – mechanical part	None	Complete mechanical-technological installation for a system of the newly constructed pumping stations
PS	PS – electrical part	None	Complete technological electrical installation for a system of the newly constructed pumping stations

Sewerage system – zone 3			
SO	Sanitary sewerage	Part of the agglomeration without sanitary sewerage, collection in septic tanks	Provide wastewater collection in the agglomeration part by a sanitary sewerage and connection to WWTP
SO	House connections	Connection to septic tanks	Construct a quality connection of public sections of connections from individual houses
Sewerage system – zone 4			
SO	Sanitary sewerage	Part of the agglomeration without sanitary sewerage, collection in septic tanks	Provide wastewater collection in the agglomeration part by a sanitary sewerage and connection to WWTP
SO	House connections	Connection to septic tanks	Construct a quality connection of public sections of connections from individual houses
SO	LV connections	None	Permanent safe and reliable power supply of every pumping station, energy consumption measurement
SO	Pumping stations	None	Provide pumping of wastewaters through a fully automatic system into a gravity system
PS	PS – mechanical part	None	Complete mechanical-technological installation for a system of the newly constructed pumping stations
PS	PS – electrical part	None	Complete technological electrical installation for a system of the newly constructed pumping stations
Sewerage system – zone 5			
SO	Sanitary sewerage	Part of the agglomeration without sanitary sewerage, collection in septic tanks	Provide wastewater collection in the agglomeration part by a sanitary sewerage and connection to WWTP
SO	House connections	Connection to septic tanks	Construct a quality connection of public sections of connections from individual houses
SO	LV connections	None	Permanent safe and reliable power supply of every pumping station, energy consumption measurement
SO	Pumping stations	None	Provide pumping of wastewaters through a fully automatic system into a gravity system
PS	PS – mechanical part	None	Complete mechanical-technological installation for a system of the newly constructed pumping stations
PS	PS – electrical part	None	Complete technological electrical installation for a system of the newly constructed pumping stations
Sewerage system – zone 6			
SO	Sanitary sewerage	Part of the agglomeration without sanitary sewerage, collection in septic tanks	Provide wastewater collection in the agglomeration part by a sanitary sewerage and connection to WWTP

SO	House connections	Connection to septic tanks	Construct a quality connection of public sections of connections from individual houses
SO	LV connections	None	Permanent safe and reliable power supply of every pumping station, energy consumption measurement
SO	Pumping stations	None	Provide pumping of wastewaters through a fully automatic system into a gravity system
PS	PS – mechanical part	None	Complete mechanical-technological installation for a system of the newly constructed pumping stations
PS	PS – electrical part	None	Complete technological electrical installation for a system of the newly constructed pumping stations
Sewerage system – zone 7			
SO	Sanitary sewerage	Part of the agglomeration without sanitary sewerage, collection in septic tanks	Provide wastewater collection in the agglomeration part by a sanitary sewerage and connection to WWTP
SO	House connections	Connection to septic tanks	Construct a quality connection of public sections of connections from individual houses
Sewerage SCADA system			
PS	Dispatching centre	None	Construction of a dispatching centre, provision of backup power supplies
Existing sewerage system reconstruction~~Sewerage SCADA system~~			
SO	Sewerage system reconstruction	Pipes of combined sewerage in bad conditions, inadequate capacity	Construct a new sewer and reconnect connections
~~PS~~	~~Dispatching centre~~	~~None~~	~~Construction of a dispatching centre, provision of backup power supplies~~

4.1.2. Description of construction works

4.1.2.1. Common requirements on construction works

Wastewater quantity and existing sewerage system

A new separate sewerage system will be constructed to provide the collection of sanitary wastewaters. The Contractor shall ensure an appropriate value of the specific wastewater production per 1 PE/day. Regarding the existing sewerage system it is also necessary to consider a certain quantity of ballast and storm waters, to be specified by the Contractor. The Contractor shall also examine the capacity of required sections of the existing system. Upon these data, values for sewer diameters and pumping station parameters will be determined. The dimensioning, designing and realising the pumping station and piping in individual parts of the agglomeration must take into account possible connection of sanitary wastewaters from other unconnected parts of the Danilovgrad agglomeration, in compliance with the draft town planning scheme.

Further, the Contractor shall produce the passport of the existing sewerage system, incl. construction-technical condition assessment upon camera survey. If any section of the sewerage system is found to be in disrepair, local repair shall be considered.

Sewerage system

Location of sewerage system routes

The construction will be performed mainly in a built-up area. The sanitary sewerage will be designed as a gravity type along buildings, with individual sewers gravitating in their lowest points into pumping stations. Sanitary wastewaters will be pumped from the pumping stations through delivery piping into terminal manholes of relevant gravity sewers.

Sewers will run in existing as well as designed communications, pavements, road shoulders, plots and green belts as allowed by buildings and other existing underground and aboveground utility lines.

The construction will include renovation of hard surfaces only above trenches. New and existing layers shall be connected according to the requirements of the road operator by the division of individual structural layers of the roadway.

The gravity sewerage system will run in some sections parallel with delivery piping.

The sewerage system route will cross the Zeta river course.

Since this is construction of an underground utility system of a large scope, parallel running with and crossing of other existing underground utility lines will occur.

The route of the designed sewerage system should be planned in a way to avoid the routes of existing as well as prospective utility lines as specified by the draft town planning scheme, in compliance with valid legislation. If not possible, relaying of utility lines should be planned.

The vertical alignment of the designed sewerage system planned should cross existing and prospective underground utility lines as specified in the draft town planning scheme, in compliance with valid legislation, for example by a prospective storm sewerage system.

Piping material

The Contractor shall be responsible for the piping material designed. However the designed gravity sewerage system is recommended to be made of PP (polypropylene - preferred) or PVC (polyvinyl chloride) smooth wall pipes or ribbed wall pipes with the minimal diameter DN 200 and minimal circular rigidity of ≥ 8 kN/m2 (SN8), connected through sockets with massive profiled sealing. Upon the structural assessment, pipes with the minimal circular rigidity of SN10 shall be used in roads and of SN8 outside roads.

The PP smooth wall pipes and fittings must have a full non-structured wall made of 100% PP-HM without fillers and recycled material, special inner abrasion-resistant wall finish, flushability up to 340 bar, in-built integrated sealing ring in the socket with 2.4-5.0 bar tightness. With the exception of flange connections and places where otherwise specified or approved by the Engineer, piping socket connections must be flexible and sealed with a rubber ring or other sealing approved by the Engineer, and must comply with all required tests.

The designed delivery piping from pumping stations is recommended to be made of PEHD pipes, PE100 material, SDR 17, PN 10 with diameter DN 80 to DN 150 (DN=inner diameter). HDPE pipes shall be connected only with electrocast couplings.

During the construction, handling, and laying of the piping system, assembly instructions of the manufacturer given in the assembly regulation shall be followed.

Gravity sewers

The minimum piping gradients will be designed in compliance with a relevant regulation. Upon the operator's requirement, rinsing manholes will be constructed at the ends of the sewers. Pressure vehicle cleaning is designed for the flushing.
With regard to the minimum gradients of the piping bottom it will be necessary to meet the minimum gradients during the construction. It means perfect drainage of the trench bottom, sand sub-base and backfilling of an adequate thickness, laser-guided height and direction pipe laying. Each laying crew will be formed of appropriately qualified workers and equipped with a laser guide.

Delivery piping

The designed longitudinal gradient of the piping bottom will comply with an appropriate regulation. If necessary, aeration and sludge shafts will be installed along the piping, and surge shafts before opening into the gravity sewer. Besides the basic functions of aeration, desludging and surging the flowing water energy, these shafts will provide an access to the piping for cleaning. Valves and connecting pipes will be required to be watertight, functional and resistance in wastewater operation conditions (material – cast iron, stainless steel). The minimal speed in the piping for the designed flow should not drop below 0.8 m/s.

House connections

House sewerage connections will be designed in compliance with an appropriate regulation in the scope of their public part which will end with an inspection shaft D425 (off road). The connection of a house into the shaft shall be paid for by the house owner.

Wastewater pumping stations

Wherever possible, pumping stations will be situated in public plots outside communications. They may be designed inside communications only if there is no other space available.

Pumping stations will be designed as complete underground stations made of reinforced-concrete monolithic or precast watertight components. Alternatively, standard plastic structures with concrete lining may be designed. They will be constructed in foundation pits provided with suitable sheeting. The Contractor shall be responsible for lowering the groundwater level and for creating conditions allowing the structures and PSs to be founded in dry conditions. The Contractor may choose a suitable method of the PS construction, since being fully responsible for the PS design and realisation, including the provision of occupational safety and health protection.

Openable lockable covers are designed in the PS ceilings to allow installation and access. The lockable covers and access to the PS's will be designed in compliance with appropriate regulations. Access ladders shall be made of stainless steel.

One operating pump and one backup pump will be installed in the pumping stations, in exceptional cases more operation pumps. The PS operation will be fully automatic depending on the water level in the accumulation space of the PS; the pump operation and breakdowns will be signalled by remote transmission to the dispatching centre of the Danilovgrad WWTP. The design will include LV connections and backup sources.

Pumping stations located along the sewer system are divided to two categories:

1) Category 1 pumping station – wet chamber without return valves:
   From the PS wet chamber, individual delivery piping leads from each pump into the inspection shaft in a sewer section located downstream. The delivery piping is without gates and valves.

2) Category 2 pumping station – wet chamber with return valves:
   Wastewater will flow through single delivery piping to a gravity section of the follow-up catchment area. The pump delivery piping is fitted with return valves and gates with gate valve sets. Behind the gates, the piping will join into a single delivery.

4.1.3. Sewerage System

The assumed numbers of physical indicators are only approximate and may differ from a specific design of the Contractor, extent of sewerage must be maintained.

4.1.3.1. Sewerage system – zone 1

Existing situation

The part of the zone 1 is without a sewerage system. Sanitary wastewaters of the existing combined sewerage system are drained directly into the Zeta river.

Scope of works

The construction subject is the design and realisation of separate sanitary sewerage incl. public sections of house connections in order to ensure reliable wastewater collection to the Danilovgrad WWTP ~~and reconstruction of the existing sewerage system incl. house connections~~. The sewerage system will be designed as a gravity type, due to the flat character of the area pumping is expected. A overflow/closing chamber will be constructed before the WWTP as part of the WWTP.

DIVISION TO MECHANICAL&ELECTRICAL ENGINEERING UNITS AND BUILDING STRUCTURES

SO/PS TITLE	INDICATION
~~SO~~	~~Sewerage system reconstruction~~
SO	Sanitary sewerage
SO	House connections
SO	LV connections
SO	Pumping stations
PS	Pumping stations – mechanical part
PS	Pumping stations – electrical part

ASSUMED PHYSICAL INDICATORS OF THE CONSTRUCTION:

Structure	Quantity	Unit
~~Sewerage system reconstruction~~	~~3171~~	~~m~~
New gravity sewerage system	930	m
Pumping stations	2	pc
Delivery piping	226	m

4.1.3.2. Sewerage system – zone 2

Existing situation

The zone 2 area is without a sewerage system except for a sewer running along the main road which is just being constructed. Sanitary wastewaters in this area are currently collected in septic tanks, without organised collection and following treatment.

Scope of works

The construction subject is the design and realisation of separate sanitary sewerage incl. public sections of house connections in order to ensure reliable wastewater collection to the Danilovgrad WWTP. The sewerage system will be designed as a gravity type, due to the flat character of the area pumping is expected.

DIVISION TO MECHANICAL&ELECTRICAL ENGINEERING UNITS AND BUILDING STRUCTURES

SO/PS TITLE	INDICATION
SO	Sanitary sewerage
SO	House connections
SO	LV connections
SO	Pumping stations
PS	Pumping stations – mechanical part
PS	Pumping stations – electrical part

ASSUMED PHYSICAL INDICATORS OF THE CONSTRUCTION:

Structure	Quantity	Unit
Gravity sewerage system	2,9142,704	m
Pumping stations	3	pc
Delivery piping	948	m

4.1.3.3. Sewerage system – zone 3

Existing situation

The major part of the zone 3 is without a sewerage system. Sanitary wastewaters in this area are currently collected in septic tanks, without organised collection and following treatment.

Scope of works

The construction subject is the design and realisation of separate sanitary sewerage incl. public sections of house connections in order to ensure reliable wastewater collection to the Danilovgrad WWTP. The sewerage system will be designed as a gravity type.

DIVISION TO BUILDING STRUCTURES

SO TITLE	INDICATION
SO	Sanitary sewerage
SO	House connections

ASSUMED PHYSICAL INDICATORS OF THE CONSTRUCTION:

Structure	Quantity	Unit
Gravity sewerage system	1,635	m
Delivery piping	0	m

4.1.3.4. Sewerage system – zone 4

Existing situation

The major part of the zone 4 is without a sewerage system. Sanitary wastewaters in this area are currently collected in septic tanks, without organised collection and following treatment.

Scope of works

The construction subject is the design and realisation of separate sanitary sewerage incl. public sections of house connections in order to ensure reliable wastewater collection to the Danilovgrad WWTP. The sewerage system will be designed as a gravity type, due to the flat character of the area pumping is expected.

DIVISION TO MECHANICAL&ELECTRICAL ENGINEERING UNITS AND BUILDING STRUCTURES

SO/PS TITLE	INDICATION
SO	Sanitary sewerage
SO	House connections
SO	LV connections
SO	Pumping stations
PS	Pumping stations – mechanical part
PS	Pumping stations – electrical part

ASSUMED PHYSICAL INDICATORS OF THE CONSTRUCTION:

Structure	Quantity	Unit
Gravity sewerage system	3,762	m
Pumping stations	1	pc
Delivery piping	6	m

D.O.O. VODOVOD I KANALIZACIJA DANILOVGRAD ViK
STRABAG AG

4.1.3.5. Sewerage system – zone 5

Existing situation

The major part of the zone 5 is without a sewerage system. Sanitary wastewaters in this area are currently collected in septic tanks, without organised collection and following treatment.

Scope of works

The construction subject is the design and realisation of separate sanitary sewerage incl. public sections of house connections in order to ensure reliable wastewater collection to the Danilovgrad WWTP. The sewerage system will be designed as a gravity type, due to the flat character of the area pumping is expected.

DIVISION TO MECHANICAL&ELECTRICAL ENGINEERING UNITS AND BUILDING STRUCTURES

SO/PS TITLE	INDICATION
SO	Sanitary sewerage
SO	House connections
SO	LV connections
SO	Pumping stations
PS	Pumping stations – mechanical part
PS	Pumping stations – electrical part

ASSUMED PHYSICAL INDICATORS OF THE CONSTRUCTION:

Structure	Quantity	Unit
Gravity sewerage system	5,267	m
Pumping stations	2	pc
Delivery piping	12	m

4.1.3.6. Sewerage system – zone 6

Existing situation

The zone 6 area is without a sewerage system. Sanitary wastewaters in this area are currently collected in septic tanks, without organised collection and following treatment.

Scope of works

The construction subject is the design and realisation of separate sanitary sewerage incl. public sections of house connections in order to ensure reliable wastewater collection to the Danilovgrad WWTP. The sewerage system will be designed as a gravity type, due to the flat character of the area pumping is expected.

DIVISION TO MECHANICAL&ELECTRICAL ENGINEERING UNITS AND BUILDING STRUCTURES

SO/PS TITLE	INDICATION
SO	Sanitary sewerage
SO	House connections
SO	LV connections
SO	Pumping stations
PS	Pumping stations – mechanical part

PS	Pumping stations – electrical part

ASSUMED PHYSICAL INDICATORS OF THE CONSTRUCTION:

Structure	Quantity	Unit
Gravity sewerage system	13,386	m
Pumping stations	2	pc
Delivery piping	51	m

4.1.3.7. Sewerage system – zone 7

Existing situation

The zone 7 area is without a sewerage system. Sanitary wastewaters in this area are currently collected in septic tanks, without organised collection and following treatment.

Scope of works

The construction subject is the design and realisation of separate sanitary sewerage incl. public sections of house connections in order to ensure reliable wastewater collection to the Danilovgrad WWTP. The sewerage system will be designed as a gravity type.

DIVISION TO BUILDING STRUCTURES

SO TITLE	INDICATION
SO	Sanitary sewerage
SO	House connections

ASSUMED PHYSICAL INDICATORS OF THE CONSTRUCTION:

Structure	Quantity	Unit
Gravity sewerage system	9401,150	m
Delivery piping	0	m

4.1.3.8. Sewerage SCADA system

The description of the dispatching centre and backup sources design is included in Chapter 4.4.

4.1.3.9. Existing sewerage system reconstruction

Existing situation

The area includes existing sewerage system.

Scope of works

The construction subject is the design and realisation of reconstruction of existing sewerage incl. public sections of house connections in order to ensure reliable wastewater collection to the Danilovgrad WWTP. The sewerage system will be designed as a gravity type.

DIVISION TO BUILDING STRUCTURES

SO TITLE	INDICATION

D.O.O. VODOVOD I KANALIZACIJA ViK DANILOVGRAD
STRABAG AG

SO	Sanitary sewerage
SO	House connections

ASSUMED PHYSICAL INDICATORS OF THE CONSTRUCTION:

Structure	Quantity	Unit
Gravity sewerage system	3,171	m

4.2. PARTICULAR REQUIREMENTS – MECHANICAL PART

4.2.1. Recapitulation of existing situation and required scope of works

4.2.1.1. Existing situation

The sewerage system within the Danilovgrad town-centre was constructed only in some parts, especially in streets with apartment houses and institutions. Around 2,070 inhabitants are connected to the existing sewerage system, while 3,115 inhabitants use septic tanks for the collection of sewage waters. The use of septic tanks and soakways is not satisfying due to the local loamy ground, high groundwater level, poor maintenance, and irregular disposal of sludge which causes fouling of the soakways even in a porous ground.
The existing sewerage system is formed by three separate catchments and wastewaters are discharged in the shortest ways directly to the Zeta river.
Apart from this sanitary (or combined) sewerage, there is storm sewer constructed within the urban part of the town, consisting of three main sewers.
Sewage waters from some structures are connected to the storm sewerage directly or through septic tanks. Since there is a separate sewage system built in Danilovgrad, it is necessary to completely separate the storm sewerage from sanitary sewerage.

4.2.1.2. Required scope of works

The main objective of the project is to provide sewerage system for the Danilovgrad agglomeration by constructing separate sanitary sewerage, especially in those town parts in which there is no existing sewerage, and by collecting wastewaters in the Danilovgrad WWTP. Regarding the terrain character it is assumed that pumping station will be necessary to be constructed within the sewerage system. These pumping stations shall be connected directly into the dispatching control system.

The Danilovgrad agglomeration area has been divided to ~~7~~ complexes stated below:

1. Sewerage system – zone 1
2. Sewerage system – zone 2
3. Sewerage system – zone 3
4. Sewerage system – zone 4
5. Sewerage system – zone 5
6. Sewerage system – zone 6
7. Sewerage system – zone 7
8. ~~7.~~ Reconstruction of existing sewerage system

ASSUMED NUMBERS OF PUMPING STATIONS:

Structure	Quantity	Unit
Pumping stations - zone 1	2	pc
Pumping stations - zone 2	3	pc
Pumping stations - zone 3	0	pc
Pumping stations - zone 4	1	pc
Pumping stations - zone 5	2	pc
Pumping stations - zone 6	2	pc
Pumping stations - zone 7	0	pc

The assumed numbers of pumping stations are only approximate and may differ from a detailed design of the Contractor.

ASSUMED DIVISION OF THE FUNCTIONAL OPERATION COMPLEXES TO MECHANICAL AND ELECTRICAL ENGINEERING UNITS (PS's) AND BUILDING STRUCTURES (SO's):

SO/PS	NAME
SO	Sewerage system reconstruction
SO	Sanitary sewerage
SO	Pumping stations
PS	Pumping stations – mechanical part
PS	Pumping stations – electrotechnical part
SO	House connections
SO	LV connections

This part of the project deals with the PS's Pumping stations – mechanical part.

4.2.2. Operating and safety regulations

4.2.2.1. Putting into operation

Prior to putting the equipment into operation, it shall be properly tested, adjusted and tested in operation. All changes made during the construction, tests and trial operation shall be documented. The revised documentation shall be submitted to the operator.

All required tests and revisions according to relevant valid standards and regulations shall be performed on the equipment before it is put into operation.

4.2.2.2. Handling

Mechanical and electrotechnical equipment shall be kept in conditions complying with valid standards and regulations. Simple electric devices without live parts with which personnel could come in contact may be handled by persons without electrotechnical qualification. Personnel appointed to operate electric equipment shall be acquainted with regulations within the scope of activities performed, or trained for such activities according to relevant regulations.

4.2.2.3. Environment data

When machinery and equipment are selected, influences of the environment in which the machinery and equipment is to be installed, must be unconditionally respected. This applies

especially to the correct selection of electric drives and other electric devices forming their parts.

4.2.3. New sewer pumping stations

This part deals with mechanical technology for the system of the newly constructed sewer pumping station.

4.2.3.1. Required technical design

Pumping stations

Wastewaters flowing to individual pumping stations shall be pumped into the sewerage system towards the WWTP. Each pumping station shall contain one operating and one backup pump, in exceptional cases more operating pumps. The PS operation shall be fully automatic depending on the water level in the accumulation space of the station. The pump operation and breakdowns shall be signalled by remote transmission to the dispatching centre of Danilovgrad WWTP. Backup sources (diesel units) shall be included (electrical part). Assembly lids, necessary access to the pumping stations, and ladders shall be included in the "Civil and building works" of the project.

Pumping stations along the sewer system are divided to two categories:

1) **Category 1 pumping station – wet chamber without return valves:**
   Separate discharge piping shall run from the wet chamber into an inspection shaft in a sewer section located downstream. The discharge piping shall be made of stainless steel, without valves and gates. Each PS shall be equipped with 2 pumps (1 operating + 1 backup). The pumps shall be of a wet-chamber design, controlled upon continuous water-level measuring. Their use shall regularly alternate for each pumping cycle.
   Pump disassembly shall be provided with a portable hoisting device.
   One hoisting device shall be delivered for each PS, with the minimum loading capacity of 250 kg, depending on the weight of selected pumps.
   Required parameters:

Min. speed of medium in discharge piping:	**0.8 m/s**
Min. discharge piping:	DN 80
Min. pump throughput:	60 mm
No. of pumps in the PS:	2 pc (1 + 1)

   The pumps shall be fitted with a crashing (or cutting) runner.
   The design of equipment must consider possible hydraulic shocks in the piping.

2) **Category 2 pumping station – wet chamber with return valves:**
   Wastewater shall flow through single delivery piping to the gravity section of another catchment area. Pump deliveries shall contain valves and gates with gate valve sets. behind the gates, piping shall join into one delivery. The PS piping shall be made of stainless steel.
   Each PS shall be equipped with 2 pumps (1 operating + 1 backup). The pumps shall be of a wet-chamber design, controlled upon continuous water-level measuring. They shall be regularly alternated for each pumping cycle.

Pump disassembly shall be provided with a portable hoisting device.
One hoisting device shall be delivered for each PS, with the minimum loading capacity of 250 kg, depending on the weight of selected pumps.

Required parameters:

Min. speed of medium in discharge piping:	**0.8 m/s**
Min. discharge piping:	DN 80
Min. pump throughput:	60 mm
No. of pumps in the PS:	2 pc (1 + 1)

The pumps shall be fitted with a crashing (or cutting) runner.
The design of equipment must consider possible hydraulic shocks in the piping.

4.2.4. Requirements on machinery and equipment of mechanical and electrical engineering units (PS)

Each PS must be delivered as a complete unit capable of a permanent safe and reliable operation. The delivery shall include especially equipment assembly, activation, and testing, personnel training, coordination of progress of all works, conducting inspection tests incl. elaboration of an inspection report.

The machinery and equipment must be selected with respect to effects of the environment in which they are to be installed. This applies especially to the selection of electric drives and other electric devices forming their parts.

All devices installed in exterior must be capable of a normal operation to -25 °C. They must be endure without any damages extreme frosts with temperature dropping even lower.

4.2.4.1. Requirements on the main machinery and equipment

Submersible sludge pump for PS's of categories 1 and 2

Characteristics:

A submersible sludge pump for pumping wastewaters with a high content of abrasive solids and fibrous substances. To be installed in the wet chamber.
Design: standard – grey cast iron
Pump throughput: min. 60 mm
Installation: wet chamber
Medium: sewage water with a high content of abrasive solids and fibrous substances

Max. operating water temperature:	25 °C
Interval of pH values:	5.5 - 11

Pump accessories:

Rest bend – grey cast iron
Stainless-steel parts: rest bend assembly set, guide bars, upper holder of upper holders, upper holder assembly set, suspension chain and chain hanger
Plastic parts: cable hanger and cable clamps, min. 15 m of cable
Motor: 400 V, 50 Hz
The motor shall be delivered incl. thermal detectors in the stator winding, detector of seal leakage and evaluating DI module of the seal leakage detector.

The motor shall be of the so-called flood design, i.e. the pump can work as submersible or with permanently exposed electromotor without the motor requiring additional cooling (it has its own inner cooling).

Portable hoisting device for PS's of categories 1 and 2

Characteristics:

For each PS, one hoisting device shall be delivered, with the minimum loading capacity of 250 kg, depending on the weight of selected pumps.

Design (example):

Folding tripod with telescopic legs.

Manual self-locking winch with automatic brake, 20 m of stainless-steel rope.

Material: hot-dip galvanised steel or stainless steel.

4.3. PARTICULAR REQUIREMENTS – ELECTRICAL AND SCADA PART

4.3.1. Recapitulation of existing situation and required scope of works

Existing sewerage system of the town of Danilovgrad shall be partly reconstructed and completed so that wastewaters are brought to the new WWTP Danilovgrad.

With regard to the area characteristics it is assumed that pumping stations will have to be constructed within the sewerage system. These pumping stations shall be connected to the dispatching control system.

4.3.2. Common requirements on electrotechnical works

4.3.2.1. Basic technical data

Power distribution system

Power distribution system shall operate at the following voltages:

High voltage (HV):

- 3 35 kV AC, 50 Hz
- 3 22 kV AC, 50 Hz
- 3 10 kV AC, 50 Hz

Low voltage (LV):

- 3+PEN, 400/230 V AC, 50 Hz, TN-C
- 3+PEN, 400/230 V AC, 50 Hz, TN-C-S
- 3+N+PE, 400/230 V AC, 50 Hz, TN-S
- 1+N+PE, 230 V AC, 50 Hz, TN-S

Extra low voltage (ELV):

- 2 24 V AC SELV, PELV
- 2 12 V AC SELV, PELV

2 24 V DC SELV, SELV

2 12 V DC SELV, SELV

4.3.2.2. Standards

Used materials and the design of construction parts as well as the final supplied equipment shall comply with valid Montenegro standards, ENs and ISO standards or with specifications of CENELEC. The standard or specification with the most strict requirements shall be the binding one.

4.3.2.3. Protection for safety - Protection against electric shock

Protection against electric shock shall be designed in compliance with the requirements of IEC 60364-4-41.

4.3.2.4. Protection against atmospheric and operating overvoltage

Protection against atmospheric and operating overvoltage shall be designed in compliance with EN 62305-1 to EN 62305-5 standards.

Protection against lightning stroke into aboveground parts of structures shall be designed within the electrical installation of civil part. It shall consist of equipped and random interceptors. The interceptors shall be connected to the earthing system.

Protection against overvoltage shall consist of overvoltage protectors of LPT1 to LPT3 classes situated in individual switchboards and at protected devices.

4.3.2.5. Power Factor Correction

Reactive energy correction in pumping stations along the sewerage system shall be separate for each pump. Condensers shall be situated in technological switchboards.

4.3.2.6. Earthing and equipotential bonding

Earthing

A new earthing system shall be constructed for each pumping station, consisting of foundation or perimeter earth devices or their combination.

A new earthing system shall be constructed for each LV connection.

Earthing systems of pumping stations and of LV connections may be interconnected.

Earthing of individual pumping stations shall be made with foundation earth devices, perimeter earth devices or their combination. This earthing shall be shared also for protection against lightning.

The foundation earth device shall be made of galvanised-steel strip with the min. profile of 120 mm^2, laid in foundations of selected structures; the perimeter earth device all be made of galvanised-steel strip with min. profile of 120 mm^2, laid in ground.

Earth inlets shall be connected through test terminals to allow the earthing system resistance to be measured.

The earthing system shall be made in compliance with IEC 60364-5-54.

Equipotential bonding

A protective terminal block (bus-bar) of switchboards, earth inlet of a new earthing system, and main equipotential bonding shall be connected to main protective bus-bar.

The structure shall be earthed with a new earthing system. This system shall be made with an earth strip FeZn 30x4 mm laid in a trench around the pumping station structure (approx. 1 m from the structure). The peripheral earthing shall be completed with another earth connector - an earth strip FeZn 30x4 mm laid in a trench of the LV connection, approx. 25 m from the structure.

The main equipotential bonding shall be made in pumping station. All metal pipes inside the structure, metal structural parts, if within reach at normal usage, and metal concrete reinforcement (if accessible and reliably connected) shall be connected to main equipotential bonding.

Supplementary equipotential bonding shall include all non-live parts of fixed devices accessible to touch and foreign conductive parts incl. main metal concrete reinforcement (if feasible). The equipotential bonding system must be connected with protective conductors of all devices including sockets.

Equipotential bonding shall be made in compliance with IEC 60364-4-41 and IEC 60364-5-54.

4.3.2.7. External influences

Within the project preparation, the Contractor shall provide the elaboration of the "Report on identification of external influences", containing the identification of external influences occurring in individual spaces. The identification of influences shall be performed in compliance with IEC 60364-5-51.

All electrical devices shall be designed and supplied to comply with external influences in the place of installation, both in terms of their proper functioning and providing reliability of safety measures.

4.3.2.8. Construction of electrical installation

The whole electrical installation shall be realised according to valid standards. The ingress protection rating of electrical appliances, switchboards, and devices must comply with external influences and qualification level of personnel providing operation and maintenance of electrical equipment.

The ingress protection rating (IP) of electrical instruments and equipment must meet requirements give by external influences according to IEC 60364-5-51.

The minimum required ingress protection rating of electrical instruments and equipment:

In spaces with AD1 occurrence - IPx0

In spaces with AD2 occurrence - IPx2

In spaces with AD3 occurrence - IPx3

In spaces with AD4 occurrence - IPx4

In spaces with AD5 occurrence - IPx5

In spaces with AD6 occurrence - IPx6

In spaces with AD7 occurrence - IPx7

In spaces with AD8 occurrence - IPx8

In spaces with AE1 occurrence - IP0x

In spaces with AE2 occurrence - IP3x

In spaces with AE3 occurrence - IP4x

In spaces with AE4 occurrence - IP5x, IP6x

In spaces with AE5 occurrence - IP5x, IP6x

In spaces with AE5 occurrence - IP6x

In exterior - IP54

Cable passages through walls, floors, ceilings into various spaces shall be sealed against water penetration and with a fire partition.

4.3.2.9. Description of control

The construction of all devices shall enable them to be operated in both manual and automatic modes. The operation mode selection switch and control and signalling elements shall be located on the inner control panel of the switchboard.

4.3.2.10. Required cabling design

Electrical installation of the HV level (35 kV, 22 kV, 10 kV) shall be made with single-core cables with copper or aluminium core, bare exterior lines with steel AlFe ropes.

Electrical installation of the LV level (400 V AC, 230 V AC) shall be made with cables with copper or aluminium core and plastic cover – power cables with core profiles up to 16 mm^2 shall be always with copper cores, cables with core profiles over 25 mm^2 may be with copper or aluminium cores. Cables for drives supplied from frequency converters shall be shielded of concentric. Signal and control cables shall be of a shielded type with copper cores and plastic cover.

Electrical installation of the ELV level (up to 24 V AC/DC, 12 V AC/DC) shall be made with cables with copper cores and plastic cover. Communication cables shall be with twisted pairs.

Cables of the LV level (400 V AC, 230 V AC) must be laid separately from cables of the ELV level (up to 24 V AC/DC, 12 V AC/DC) in separate pipes, protection pipes, and troughs, or in one trough and separated with an earthed metal partition.

Cables of the "Heavy current distribution" part shall be laid separately from cables of the "Instrumentation ad Control (I&C)" and "Automatic control of technological processes (ACTP)" parts in separate pipes, protection pipes, and troughs.

Inside the structures, the cables shall be laid in galvanised-steel cable troughs coated with plastic lacquer, in an environment with increased aggressiveness in stainless-steel troughs.-

From troughs to individual devices the cables shall be laid in flexible or rigid plastic wiring conduits resistant to UV radiation.

In the ground the cables shall be laid in protection pipes, exceptionally directly in the ground. These cable routes shall be made from plastic corrugated double-walled rigid and flexible protection pipes fixed with spacing holders. The minimum inner diameter of the protection pipes must be 100 mm. Under communications the protection pipes shall be concrete-encased-

In devices with their own cable (e.g. submersible pumps) this cable shall end in the terminal box located close to the device.

All passages of cables and cable routes shall be sealed against penetration of contaminants, water, and moisture. In spaces containing gas as a medium, passages shall be gastight. In boundaries of two fire compartments cables shall be sealed with fire stoppers.

All steel supporting structures of cable routes must be protected against corrosion by hot-dip galvanising and plastic coating.

4.3.2.11. Cable troughs

Cable troughs shall be made of non-perforated or perforated sheet-steel, fitted with lids, mounted to assembly profiles, supports and cantilevers.

Troughs shall be provided with inner partitions to separate cables of different voltage levels.

Individual parts of the cable troughs shall be made of galvanised sheet-steel. All troughs must be free of sharp edges which could get in contact with conductor insulation. Any screws and other fastening elements must be prevented from damaging insulated conductors or cables. Connecting individual parts together shall be made with couplers and bolts with fan-shaped washers placed below bolt heads and below nuts.

Cable troughs and lids shall be shortened to non-standard lengths during assembly by shearing and cutting. Horizontal sloping of a cable route shall be made by notching a trough sidewall to create the necessary route direction. Sharp edges formed in this way must be freed of sharp burrs and then coated with anticorrosion protection of the cut section by a zinc spray and hemmed with an edge protector.

Diversion of a cable fro the route shall be made by cutting-open or interrupting a trough, with subsequent hemming with an edge protector, or by using a cable terminal, or by running the cable out of the trough without a lid.

In order to ensure sufficient resistance to corrosion, cable troughs (all parts incl. lids) shall be **made in the form of galvanised-steel troughs coated with powder lacquer** (not only on their outside, but completely). Cable troughs (all parts incl. lids) intended for assembly in spaces with high corrosive aggressiveness and for exterior assembly shall not be made of galvanised steel, but **completely of austenitic chromium-nickel stainless steel** (AISI304).

4.3.2.12. Wiring conduits

Flexible or rigid plastic pipes with min, medium mechanical resistance, intended for installation on the surface and below plaster, suitable also for assembly inside hollow walls, partition walls, and concrete. Resistant to UV radiation.

Flexible or rigid steel pipes with high mechanical resistance, hot-dip galvanised, with high resistance to corrosion – category 4.

4.3.3. Requirements on "LV connection"

A new LV connection shall be constructed for supplying pumping stations with electric power.

It is the Contractor's obligation to prepare the Design Works in accordance with Montenegrin laws, for obtaining the Building permit.

The new LV connection shall consist of:

- Connecting point
- Unmeasured section of the LV connection
- Electric meter switchboard
- Measured section of the LV connection

Connecting point, unmeasured section of the LV connection

Technical solution of the connecting point of the LV connection and of unmeasured section of the LV connection shall be determined upon possibilities in the place of intake.

The LV connection shall always be three-phase.

Electric meter switchboard

The electric meter switchboard shall be installed outside, in a suitable spot close to the pumping station.

The switchboard shall be a free-standing pillar, with anti-corrosion design (plastic or stainless steel), installed on a plastic stand with a ground section, designed and connected according to the distribution company's requirements.

The switchboard shall be fitted with a three-phase electrometer for measuring of consumption, test terminal box, circuit-breaker before the electrometer, and other equipment in compliance with local practice.

The switchboard shall be provided with an outlet for connecting a pumping station switchboard.

Measured section of the LV connection

The measured section of the LV connection includes a cable outlet from the electric meter switchboard into the pumping station switchboard.

This supply cable shall run underground.

A trench shall be excavated for laying the supply cable from the electric meter switchboard to the pumping station switchboard. A PVC drop-over cable protector and a warning foil shall be laid in the trench above the cables. The backfill shall be compacted and surface restored to its original condition, including hard-surface areas and roads in their original structure).

4.3.4. Requirements on "Heavy current distribution"

The technology of each pumping station shall be connected from a separate technological switchboard.

4.3.4.1. Switchboards

The pumping station switchboard shall be adjusted for power supply from two sources – a LV connection and a mobile backup power supply.

For connecting the mobile backup power supply the switchboard shall be fitted with a patchplug compatible with socket of backup power supply.

Inlets from the LV connection and patchplug for backup power supply shall be connected to an inlets switch. The LV connection inlet shall be fitted with voltage presence control with transmission to SCADA.

The switchboard inlet shall contain a multifunctional digital apparatus for operating measuring electric parameters (voltage: U1, U2, U3, U12, U23, U13; current: I1, I2, I3; power: P, Q, S (kW, kVAr, kVA); frequency f; consumption E (kWh, kVArh)) and indicating them on the display and transmitted to the SCADA system.

The switchboard shall contain outlets for connecting and controlling individual drives.

In order to reduce starting currents, all drives with output 4 kW and more shall started through star-delta starting or with soft starters.

The switchboard shall be installed outside, in a suitable spot close to the pumping station.

The switchboard shall be a free-standing pillar, with anti-corrosion design (plastic or stainless steel), installed on a plastic stand with a ground section.

If the switchboard is installed close to a metering switchboard, both switchboards shall be of a uniform appearance.

The minimum protection of the switchboard shall be IP54, after door opening with min. IP20.

4.3.4.2. Frequency converters

If frequency converters are used for supplying pumps, they shall be located inside the switchboard.

Frequency converters shall be controlled trough an industrial communication protocol.

Frequency converters for supplying drives without installed reserve shall be equipped with a bypass.

Each drive shall be connected to its own converter. One converter must not be used for connecting more than one drive (not even when one of them is a reserve drive).

Suppressing filters and commuting chokes shall be installed on the frequency converters supply. Motor chokes shall be installed on outlets from the frequency converters. Drives shall connected to the converters with plastic shielded cables with copper cores.

Frequency converters shall be fitted with communication cards for communication with a superior control system.

Frequency converters shall be fitted with operator' panel for local displaying and entering parameters.

All frequency converters shall be from one manufacturer, from one type range if possible. Converters shall be from the same manufacturer as those used for the WWTP Danilovgrad - if it is known already.

Required minimum technical parameters

- Frequency converters shall be supplied including accessories and inlet (network) choke, input EMC filter of min. class A, intercircuit DC choke, and outlet sine filter or motor choke.
- Four-quadrant frequency converters shall always be used.
- The minimum efficiency of the converters shall be 97.5% at nominal current and voltage.
- Electrically separated power and control circuits, printed circuit boards lacquered.
- Motor protection: thermal protection based on continual calculation of I2t with respect to actual running speed, saving motor temperature conditions upon frequency converter being switched off, protection against output phase outage, thermal insulation with the use of PTC sensors in the motor winding.
- Minimum protection IP20 when installed inside a switchboard.

4.3.4.3. Soft starters

If soft starters are used for power supply of pumps, they shall be located inside the switchboard.

Soft starters shall be controlled with an industrial communication protocol.

All soft starters must be equipped with a bypass.

Each drive shall be connected to its own soft starter. One soft starter must not be used for connecting more than one drive (not even when one of them is a reserve drive).

Soft starters shall be fitted with communication cards for communication with a superior control system.

All soft starters shall be from one manufacturer, from one type range if possible. Soft starters shall be from the same manufacturer as those used for the WWTP Danilovgrad - if it is known already.

Required minimum technical parameters

- Electrically separated power and control circuits, printed circuit boards lacquered.
- Minimum protection IP20 when installed inside a switchboard, IP40 when installed on switchboard room wall.

4.3.4.4. Backup power supply

Backup power supply must be provided to supply the pumping station switchboard when outage of supply from LV connection occurs.

The backup power supply output must ensure full operation of the pumping station technology.

The backup power supply must be capable of maintaining this operation permanently for an unlimited time.

The backup power supply shall be mobile, fitted on a carriage homologated for public communications.

For a complex of pumping stations the following backup supply sources shall be delivered:

- 1x "bigger" backup supply sources – with output dimensioned for the largest pumping station;
- 3x "smaller" backup supply source – with output dimensioned for other pumping stations

Preparation of the backup power supply and its connection to the pumping station switchboard must be performable by one person. Its operation after being started must be fully automatic.

4.3.5. Requirements on "Instrumentation and Control (I&C)"

Instrumentation for measuring non-electric quantities shall be installed in pumping stations. Measured values shall be displayed on converters in the places of measuring and transmitted to the SCADA system.

Instrumentation shall be connected from the pumping station switchboard. Outlets for instrumentation shall be located in a separated part of the switchboard – in its control part.

The instrumentation supply shall be backed-up from the UPS with the minimum backup time of 180 minutes.

All the below-described devices are expected to be situated directly within the technology and are required to operate long-time reliably in local conditions. The following conditions are usual for the sewerage pumping station technologies:

- Ambient temperature: -25 to +40 °C,
- Wastewater and sludge temperature: 0 to +60 °C,
- High humidity, in winter risk of vapour condensation in instruments,

STRABAG

- Aggressive vapours of various concentrations present in structures with the occurrence of wastewater and sludge in all treatment stages,
- All instrumentation, evaluation units, controllers, and display units located in exterior must be provided with a protective shelter against atmospheric conditions.

Water level measuring

Continual water-level measuring shall be performed preferably with contactless instrumentation – e.g. ultrasound detectors or motion detectors. If contactless measuring cannot be used, contact measuring shall be used instead, e.g. with tensiometers.

Limit water levels measuring shall be performed with floating and capacitance detectors. The minimum level shall block the pump operation, the maximum level shall signal an emergency water level.

Securing against unauthorised entry to the structure

The structure shall be secured against unauthorised access with a contact mounted on the entrance cover. A door contact shall be placed on the control switchboard door.

Signals from all detectors shall be connected through the cut-out relay to PLC inputs in the control switchboard.

An authorised person entering the structure shall enter his/her personal access code on the HMI panel on the control switchboard. If a correct access code is not entered on the HMI panel within approx. 30 seconds (adjustable parameter), the PLC shall evaluate the entry to the structure as unauthorised, send information about unauthorised entry to the control centre (through the GSM router), and at the same time trigger local alarm (horn).

4.3.5.1. Control part of switchboard

The control part of a pumping station switchboard shall be separated from the heavy current part. The separation shall be made with a metal partition, alternatively the control part may be built as a separate switchboard box.

The control part of the switchboard shall contain outlets for instrumentation, programmable logic controller (PLC) of the pumping station, overvoltage protection, cut-off relays of PLC inlets and outlets, and a GSM router for communication with the dispatching centre.

4.3.6. Requirements on "Automatic control of technological processes"

The pumping-station technology system control shall be fully automated.

The control system shall consist of programmable logic controllers (PLC) on the process level, and a dispatching computer with SCADA environment on the superior level.

4.3.6.1. Dispatching centre architecture

Process level

Freely programmable logic controllers shall be installed on the process level, programmable from the superior level.

D.O.O. VODOVOD I KANALIZACIJA ViK DANILOVGRAD
STRABAG AG

Programmable logic controllers

Each pumping stations shall be equipped with a freely programmable logic controller which shall provide an unattended operation of the pumping station. An application software shall be prepared for each PLC for the control of the given pumping station operation and for dispatching control.

Signals of conditions of individual technology devices and signals of quantities measured shall be connected to individual inlets of the of the logic controlled through a limit terminal box.

Commands for the control of individual technology devices shall be relayed through individual outlets of the logic controller through the limit terminal box.

Logic controllers shall communicate with the dispatching centre.

Programmable logic controllers shall be of a modular or compact design. Each controller shall be fitted with its own source, processor, and processor interface formed by a set of digital and analog inlets and outlets. Actuating devices and power elements shall be connected to output digital cards through cut-out relays, other signals and measured quantities shall be connected through overvoltage protection.

Each PLC will be fitted with a touch graphic panel of human machine interface (HMI), min. 5.7", enabling visualisation and control of individual technological devices of the pumping station.

Controllers shall be equipped with the Ethernet communication interface for connection with the superior level.

Controllers shall be equipped with a communication interface for industrial communication, for connection of frequency converters.

The PLC supply shall be backed-up from the UPS, with the minimum backup time of 180 minutes.

Control switchboards

PLC shall be installed in the control part of the pumping station switchboard.

The switchboard doors shall be provided with an HMI touch panel through which data can be entered to technological formulas for the control of a given part of the technology.

Superior level

The dispatching centre shall be realised on two redundant servers (one of them serving as "hot backup"). Two operator's consoles, with SCADA software visualisation running on them, shall be connected to these servers.

The dispatching centre shall be provided with graphic output: network laser colour printers with scanners for printing: A4, A3+, min. 600 dpi, scanner, copier with automatic feeder, Ethernet.

The UPS shall ensure operation of the whole dispatching centre in case of power supply outage for at least 120 minutes.

Visualisation SCADA system

The dispatching centre shall be equipped with an advanced system providing graphic visualisation of the whole technology condition, fault condition reporting, data and event archiving. Further, individual schemes, diagrams, trends of measured and operational quantities, etc. may be visualised graphically.

The program equipment shall be built on the SCADA/HMI system, installed on two servers and two operator's consoles, and shall work in a full redundancy mode.

Authorisation for access to the system shall be divided to several levels with various rights. Every operator may have his/her own login name, password, and set of permitted activities and rights.

Algorithms of technology control

The project of technology control algorithms shall include a detailed description of the operational method of individual technological devices, conditions of their starting/stopping, operation control parameters, mutual blocking conditions, etc.

The algorithm control project shall serve as the basis for the creation of an application software and visualisation.

The algorithm control project shall be submitted to the Employer after the trial operation completion.

4.3.7. Requirements on "Sewerage SCADA system"

SCADA - Supervisory control and data acquisition.

A dispatching centre shall be built for supervisory control and data acquisition from individual pumping stations.

The supervisory control of Danilovgrad sewerage system shall include all sewerage pumping stations.

4.3.7.1. Supervisory control conception

The supervisory control shall consist of two subsystems.

Subsystem for data collection and local control in a remote structure

This subsystem shall consist of several devices situated in a remote structure: local PLC, GSM router, and feeding system with UPS.

- Each PLC shall be fitted with a suitable HMI device – a colour touch panel or colour panel with functional keys. The PLC shall support data logging in a database accessible through a PC software application delivered together with the PLC.
- UPS shall be in an industrial version, equipped with relay outputs enabling remote monitoring: indication of a failure, battery power drop, and supply voltage loss.

D.O.O. "VODOVOD I KANALIZACIJA" DANILOVGRAD ViK
STRABAG AG

- GSM router shall be an autonomous device in an industrial aversion. It shall enable other device to be connected through a serial line (RS485/232), Ethernet and VPN to a mobile operator network. The GSM router shall be fitted with at least two digital inputs and one digital output, available for SCADA applications. The router shall be able to be configured for work in TCP client mode, and for work of TCP server mode, and for sending e-mails and text messages to predefined destinations.

The proposed solution of data transmission must support DNP.3 protocol which provides communication between PLC and SCADA according to the incident (incident is a change of the digital value status or change of analog variable size to a defined value). In this way, the quantity of data transmitted is minimised within a determined period, which means significant reduction of data transmission costs (paid to the mobile network operator).

Supervisory control subsystem

The supervisory control subsystem shall be based on a software platform adapted to the control of a geographically distributed system and integration of a SCADA application, industrial real-time database, and server services (web portal).

Software components shall be installed to four computers, two servers and two operator work stations. The hardware structure designed in this way ensures high reliability and redundancy in terms of communication links and protection of archived data.

The software SCADA application shall provide graphic presentations of regulated devices and relevant process parameters, display of alarm and incident history, graphic display of historic and real-time trends. The database shall include an integrated software tool enabling access and creation of messages upon archived data.

An industrial database software with an autonomous mechanism of data logging according to various criteria shall serve for data archiving.

A software application mediating communication between devices in the field (PLC) and SCADA application shall be utilised.

Further, a WEB server shall be used, enabling the creation and display of web reports with real-time or archived data. Computers with a WEB client installed then shall have access to these reports.

Communication between the control centre means and remote structures shall run through an industrial GSM router, integrating the functions of firewall and switch in a single device.

4.3.7.2. Data transmission conception

Communication of individual structures (pumping stations) shall be made mainly through the control centre. Further, the system shall provide also mutual communication between individual structures through a "peer to peer" system.

The sewerage dispatching (control room) shall be located in an administrative building of D.O.O. "Vodovod i kanalizacija" Danilovgrad.

The sewerage dispatching shall be formed by a two servers, GSM router, two operator stations, UPS for supplying the whole system, and other accessories.

D.O.O. VODOVOD I KANALIZACIJA DANILOVGRAD ViK
STRABAG AG

Server

The sewerage dispatching (control center) shall be fitted with a server intended for collecting and archiving data from individual structures included in the system (pumping stations) and providing these data for the control and mutual coordination of the operation of these structures.

Operator work stations

The server shall be connected through a local computer network to two work stations. These shall be equipped with a SCADA software with a required number of variables, necessary drives and modules for archiving data and trends.

Visualisation

Using the SCADA visualisation software, the operator will be able to display dynamic mimics of the whole sewerage system and individual structures. These mimics shall show all available information on the current conditions of individual structures and system parts, such as the water-level height, operational status of pumps, failures, alarm reports etc.

The operator shall have access to data from the server archive and will be able to display them in the form of various tables, diagrams, overviews, development trends, etc.

Apart form the visualisation of the system current conditions and of historical data, the operator will be able to manually enter values of various variables, and thus to influence the technological process.

4.3.7.3. Required minimum functional properties of the SCADA system

- Data acquisition from the technological process and their mathematical and statistical real-time processing
- Display and control of the technological process in a comfortable graphic environment in the form of graphic charts, diagrams, trends, and reports
- Powerful multilevel system of alarms enabling quick identification of critical situations and providing detailed information to operators for decision-making
- System capable of providing real-time information to many users within the computer network environment
- Integrated, incident-controlled scripting language for algorithmic and sequential control
- Powerful archiving system ensuring three archiving levels (primary, statistical, and long-term archives), additional writing, and delayed data processing
- Monitoring system of alarms, operators' interferences, and error conditions
- Dealing with users access rights
- Integrated graphic editor with user-expandable libraries of graphic subjects enabling simple creation of graphic presentation charts
- Support of integration to an environment of office program applications for creation of output reports and data export

- Several types of user's consoles from full operator's console enabling system configuration (thick client) up to Web consoles (thin client) enabling full access to data within the Internet/Intranet environment

Presentation

All texts on monitors and all operator's commands shall be in the local language. The local alphabet shall be used on monitors and keyboards.

Situation of monitored and controlled structures shall be displayed in a suitable combination of graphic symbols of various shapes and colours with numbers and texts. The situation of a given structure must not be shown on a display only in colours. Information displayed in colours must have shapes added to enable colour-blind persons to operate the system.

Analog signals which are not applicable (e.g. because being outside the 4-20 mA range), and calculated analog variables which are invalid shall be clearly marked.

Commands shall be issued in two steps; a command shall be valid only after "OK" is clicked by the operator.

The dynamic section of the screen must be capable of displaying at least 50 analog objects (analog variables with marked validity and monitoring of limit values), 50 binary objects (e.g. sectional quantities), or any linear combinations of these two object types. Within a system analysis the user shall elaborate a draft, submitting it to the Employer for approval, or modification. The draft shall contain image hierarchy, overall arrangement of image displaying, procedures for image displaying selection, all used symbols, colours, names, abbreviations, etc.

Signalling

Alarm signals shall be displayed in an order in which they arrive to the system. They shall be displayed and registered with a time pattern (time resolution 1 sec or shorter).

A severity level (min. 3 levels) and functional area shall be determined for individual signals.

All signals shall be registered in an alarm registration file which shall function as a periodic memory, enabling at least 5,000 signals to be kept.

The signal register and its selected parts shall be displayed on the monitor and printed. A selection criteria could be a time interval, signal type, functional area, marking, etc.

After printing a signal report on a black-and-white printer all information, displayed in colour or blinking on the monitor, must be legible.

Incident register

Incidents shall be registered with a time pattern (the same time resolution as for alarm signals).

Incidents to be registered shall include:

- All changes of binary process variables (e.g. pump starting/stopping, valve opening/ closing), program-controlled condition of changes in a process station (e.g. activation

D.O.O. VODOVOD I KANALIZACIJA DANILOVGRAD VIK
STRABAG AG

of sequential programs, transfer from one sequential program step to another, starting analog regulation between automatic and manual operation);
- Commands issued by the operator;
- Alarm signals registered in the alarm signal register.

The incident register shall function as a periodic memory, enabling up to 10,000 incidents to be kept.

Selected parts of the incident register shall be displayed on the monitor and printed in the same way as described above for the alarm signal register.

Analog data registration (trend system)

The system shall be provided with a trend registration system, registering every analog variable and every counter included in the system. It must be possible to register min. 200 analog variables and 100 counters.

The ASRTP must enable configuration of a trend database (i.e. adding and removing variables to be registered). Performing changes in the configuration must not terminate the collection of data for other variables which are registered. Analog variables, which are registered, shall be selected from an on-line database with 1-min intervals. These 1-min intervals shall be grouped into 15-min values (maximum, minimum, mean values), 15-min values shall be grouped to 1-hour, daily, and monthly values (maximum, minimum, mean values).

The calculation of the maximum, minimum, and mean values must be performed reliably even with one or more invalid or missing 1-min values.

History values of analog variables shall be saved for at least:

1.	1-min values	8 hours
2.	15-min values	72 hours
3.	Hourly values	365 days
4.	Daily values	18 months
5.	Monthly values	5 years

Counters which are registered shall be selected from an on-line database in 15-min intervals. These 15-min intervals shall be grouped in hourly, daily, and monthly values (accumulated values at the end of a relevant time interval).

History values of counters shall be saved for at least:

1	15-min values	72 hours
2.	Hourly values	365 days
3.	Daily values	18 months
4.	Monthly values	5 years

All values in the history database shall be expressed in SI units.

Curve display

It shall be possible to display and print graphic curves of variables as function of time, both from dynamic (on-line) and history (trend system data) databases.

It shall be possible to determine curves for at least six variables in one figure with individual scale for each curve. The curves shall be specified with numerical indication of displayed variables acc. to a numerical indication system on the monitor and displayed in different colours. Zooming of selected time intervals shall be enabled.

Variables for curve images shall be loaded either from the trend system or the on-line database. After data from the on-line database are displayed, a time period up to 10 sec may be selected.

The curve images shall be updated in real time so that they can function as a multichannel recorder. This applies also to curve images representing history data from the trend system. Here, history and on-line values shall be transmitted continually.

It shall be possible to save pre-defined curve images and activate them when required.

Reports and summaries of states

It shall be possible to create reports with history values from the trend system. These reports shall contain standard reports (e.g. daily, weekly, and monthly reports), and also reports for special purposes. Calculated values shall be possible to be include in these reports. The delivery shall include descriptions of report elaborator's options for calculation and distribution, and report processing means.

The system shall create summaries of states which may be configured acc. to current requirements, for example.:

- List of invalid analog signals
- Summary of devices switched to local regulation
- Summary of regulations with errors not fitting to a specified tolerance interval

Access rights

It shall be possible to specify access rights for every user according to an access level.

At least the following access right levels are assumed:

- Only displaying
- Displaying and command issuing
- Changing limit values, regulator parameters, etc.
- Configuring the system

Access rights shall be specified during the system analysis. The resulting configuration may differ upon the operators' requirements.

System reliability

A single error may not terminate data acquisition or cause a loss of alarm signals.

Printers

The system shall be equipped with an A4 printer for printing registers and reports, and an A3 printer for printing images and curves.

The printers shall use the national alphabet.

Reserve capacity

The SCADA system, when put into operation, shall dispose of a sufficient reserve capacity for 20% enlargement of the number of process variables.

This 20% enlargement shall be made by adding inlet/outlet modules to process stations, or by adding a new process station. It shall not require upgrading of processors or databases, enlargement of memory capacity, or upgrading of communication centre capacity.

4.3.7.4. Software

The SCADA system shall be provided with SW necessary for the technology control and visualisation, and SW licenses for the development and creation of application and visualisation SW.

Requirements on the program equipment of the dispatching system:

- IT support (Win 32, SQL, ODBC, OLE, COM/DCOM, OPC, TCP/IP, Internet/intranet)
- Transaction-functioning SQL database system
- Multiuser access
- Tools for algorithmic and sequential control
- Multilevel alarm system
- Automatic archiving of results of statistical calculations
- Support for delayed data processing in the archiving process
- Data export to table processor environment
- Open communication system
- Connectivity to other information systems

Minimum required SW configuration:

- Development SW for PLC*
- Development SW for operator's panels*
- Development SW for visualisation*
- Development SW for report printing*
- Visualisation SW for two redundant stations
- Application SW for PLC

- Application SW for operator's panels

** If the same development SW may be used for "Rehabilitation of sewerage" as for "Construction of WWTP", one shared license is sufficient.*

Source codes of the application SW shall be submitted to the operator after the trial operation termination.

4.3.7.5. Technical solution of data transmission

At the technical level, the communication shall be provided with data transmission through a mobile operator network. Each structure included in the control system (pumping stations) shall be equipped with a router enabling data transmission through GSM/GPRS/EDGE/UMTS, and the control centre with a router enabling data transmission through GSM/GPRS/EDGE/ UMTS/HSDPA.

An industrial GSM/GPRS/EDGE/UMTS router shall be connected to local PLC in individual structures, and the Ethernet protocol shall be used for interconnection with PLC. The router and connected devices (PLC) shall be fed from a UPS, providing unlimited operation of connected devices for at least three hours.

In the control centre, an industrial GSM/GPRS/EDGE/UMTS/HSDPA router shall be connected through the Ethernet protocol to a local computer network (formed by an Ethernet switch, servers, and operator work stations). The server, switch, operator stations, and router shall be fed from one or more UPS's. These UPS's shall be fitted with additional batteries in order to provide unlimited operation of connected devices for at least two hours.

D.O.O. VODOVOD I KANALIZACIJA VIK DANILOVGRAD
STRABAG AG

5. PRECOMMISSIONING AND COMMISSIONING ACTIVITIES TO BE PERFORMED BY THE CONTRACTOR

5.1. Documents before the construction works commencement

5.1.1. General

The Contractor shall carry out all works upon the Employer's Tender Documents (TD). No additional documents elaborated by the Contractor may change the purpose and scope of the Works described in these Tender Documents. The drawings shall comply with requirements of standards and legislation valid at the time of design documents elaboration. Contractor's documents shall be approved by the Employer as well as by Engineer. All costs related to elaboration of the above Contractor's documents are included in the Tender Price.

In the case that Engineer requires changes and the Contractor does not agree with them, the Contractor shall send written notification to Engineer within seven days from receiving the Engineer's request for modification. In such case the Contractor shall again submit his drawing (drawings) and possibly also calculations to Engineer after the Contractor considered Engineer's requirements.

If during the Contract implementation and in compliance with its conditions a need arises to modify the design documents or to apply for new or modified permissions or approvals of authorised institutions for any activity carried out on the construction site (e.g. ensuring excavation permission, permission for temporary use of roads, permission to cross public roads, railways, water courses, to cut trees etc.) the Contractor shall be responsible for acquiring these permissions, licences, approvals, certificates etc. from authorised bodies or administrators/owners including preparation of relevant documents or designs. Before such works start, subject and scope of the documents or activity shall be again consulted and approved by the Employer and Engineer.

In course of the implementation the Contractor shall observe the laws, regulations and technical standards valid in Montenegro.

5.1.2. Tender offer

The Contractor shall assure to be fully informed about the location, accesses and conditions on the construction site; the knowledge shall not be obtained from these documents only. By submitting the offer, the Contractor confirms that he got acquainted with the construction site, its characteristics and scope as well as with the scope and type of Works which will have to be implemented upon the Contract, with transport distances, all aspects and risks of the Work and its operation and that he included this information to his technical and price offer.

In the offer, the Contractor shall reflect the fact that operation of sewerage system and WWTP, will be ensured by current operator during the construction phase. The Contractor shall coordinate his activities and seek every possibility to allow maximum range of current plants operation. The Contractor shall not limit current operator in fulfilling his duties and

ensuring the operation; the Contractor shall not prevent or reduce proper running of current equipment.

In the offer, the Contractor shall include all costs related to construction implementation and the course of the work, to social welfare of the staff, their occupational health and safety etc. in the scope fully covering all construction activities.

5.1.3. Occupational health and safety

Occupational safety on the construction site shall be governed by legal regulation declaring requirements on safety of work and technical devices in course of construction, assembly and maintenance works, during construction materials manufacturing, storing and handling and during works related with construction activities.

It is necessary that all reliable staff and workers directly involved in project elaboration and works consistently observe all OHS regulations and do not support efforts to facilitate some operations, should the facilitation jeopardize their health or health of other people. In their work they should consistently observe relevant regulations regarding occupational health and safety.

a) The Contractor shall be obliged to prepare "Occupational Health and Safety Plan" when elaborating the basic design for building permit. The document shall respect the appropriate valid regulations.

b) The works shall be carried out under full operation of some sewerage systems in the town of Danilovgrad. Within these works the Contractor shall elaborate "The Agreement on Creating OHS Conditions on Shared Working Site" which shall form the annex of the written Contract according to the relevant regulation after it is approved by the Employer.

c) We also warn the Contractor of some operations connected with increased danger of injury of his own workers, Employer's workers or public. Before any underneath listed dangerous activity starts, the Contractor shall submit "Safety / Methodical Declaration" for Engineer's approval and the works may only start after the Engineer's written approval is issued and recorded in the building log. The following operations pose serious danger to health which is why measures shall be accepted to decrease the hazards:

- Excavation works (e.g. timbering to prevent earth slide, underground works, fencing/enclosures, warning signs for pedestrians)
- Works at heights (e.g. falls, falling materials)
- Closed spaces (e.g. lack of oxygen, toxic gases/vapours/smoke, explosive gases)
- Works on public roads (e.g. traffic, pedestrians)
- Lifting of heavy loads (e.g. suitable equipment, stable base, qualified operator/slinger/cager)
- Consequent course of works and other Contractor's activities (e.g. existing operation and equipment)

- Storing, handling and use of dangerous substances (e.g. chemical substances, explosives)
- Controlled manipulation with waste materials.

Further OHS measures are mentioned in section 1.

5.1.4. Quality management system

The Contractor shall implement the Quality Management System (QMS) in compliance with requirements of relevant standards; the QMS shall cover all aspects of the implemented Works including the documents which shall be archived by the Contractor throughout the validity of the Contract. The QMS shall be designed with the aim to monitor and control all activities in all phases in compliance with the Contract requirements and shall include: design monitoring, monitoring of Work schedule and achieving of goals, ensuring timely hand-over of administration, ensuring procedures and other documents. The QMS shall be submitted not later than six weeks before the construction works commencement and shall include at least the following parts:

- Quality Assurance Plan (QAP)
- Quality Control Plan (QCP)

a) Quality Assurance Plan (QAP)

QAP shall cover at least the following fields:

- Project management, organization plan and quality assurance division. The person responsible for Contractor's QAP shall be competent to decide quality assurance issues. The persons providing quality assurance shall be independent on those who carry out the Works or supervise the Works.
- Document administration.
- Settling and archiving of variances, amendments or changes in contractual documents.
- Managing material and machine deliveries including their quality control and procedures for corrective measures.
- Control of sub-contractors and suppliers and requirements on their QMS.
- Contractor's system of current documents management for Works implementation shall include the information on subcontractors and suppliers as well as the data on assuring the Work performance only upon the valid and approved documents.
- Detail Quality Control Plan drafted by the Contractor and describing important and decisive control activities based on Tender Documents, and Contractor's own draft of the Contract implementation.

b) Quality Control Plan (QCP)

The Contractor shall submit Engineer his detail Quality Control Plan (QCP) for all steps supposed to assure the quality or measures for Works for approval. The QCP shall be submitted not less than six weeks before the commencement of construction works. If

Engineer does not approve the QCP in its suggested form, the Contractor shall re-elaborate it and re-submit it for a new approval. Changes implied in QCP shall not cause any changes in the agreed contractual conditions.

The Quality Control Plan shall include all inspections and tests according to the Contract for Work as well as other usual and special inspections / tests considered by the Contractor to be important for the quality of Works. For each control activity, the QCP shall state the method, intensity, time / frequency, threshold criteria and documents and the person responsible for execution of these activities. The QCP shall contain several chapters, especially:

- Assurance of the excavation works, timbering and timbering checks and groundwater pumping during the excavation works,
- Assurance of filling works, compaction and checks of trench compaction in roads,
- Assurance of works related to foundations of pumping stations,
- Assurance of works related to construction of main building structures of pumping stations,
- Assurance of required accuracy of construction works to maintain the defined longitudinal alignment of sewerage systems,
- Assurance of required accuracy of construction works that shall be followed by technology assembling,
- Ensuring prescribed waterproof testing of sewerage systems and structures of pumping stations.

5.1.5. Elaboration of the Environmental Impact Assessment documents (EIA)

EIA is not required.

5.1.6. Elaboration of the Preliminary design for building permit (Idejni projekat)

The Contractor shall ensure preliminary design for the set of the Rehabilitation of sewerage investment project in the scope required for building permit for the entire project scope.

Rehabilitation of sewerage:

1) Sewerage system – zone 1
2) Sewerage system – zone 2
3) Sewerage system – zone 3
4) Sewerage system – zone 4
5) Sewerage system – zone 5
6) Sewerage system – zone 6
7) Sewerage system – zone 7
8) Sewerage SCADA system
9) Reconstruction of existing sewerage system

Part of the Rehabilitation of sewerage construction comprises renewal of the road damaged by excavations while laying the sewage (above the ditch).

Complete renewal of the road in its width arrangement comprises a separate construction. The Contractor shall ensure basic design for complete road renewal in route of the designed sewerage system.

Within the Contract for Work, the Contractor shall elaborate and be responsible for complete preliminary design in the scope according to section 1, including all its parts, opinions, permits, base documents and annexes in line with his work schedule approved by Engineer. The preliminary design shall be elaborated by a qualified designer. The Contractor shall guarantee that the designer as well as the sub-contractors have the necessary skills, experience and presumptions for elaboration of technical draft and required preliminary design.

The preliminary design and technical draft shall be elaborated in compliance with requirements of relevant standards and shall include materials and equipment complying with general and specific Employer's requirements. The documentation approved by Engineer and the Employer shall be handed over in 6 copies + 2 copies in electronic form (texts in *.doc, *.xls formats, drawings as *.dwg).

When submitting the application for Engineer's approval, the Contractor shall hand over two printed copies plus one electronic version on CD ROM including all drawings and calculations; Engineer shall return one copy of drawings and calculations to the Contractor with his comments. Changes and/or comments provided by Engineer on drawings or calculations shall be implemented and the drawings and/or calculations shall be handed over again in two copies until they acquire final approval.

Any additional documentation elaborated by the Contractor shall not change the purpose and scope of Works described in these tender base documents. Costs related to elaboration of the involved documentation shall be included in the Tender Price.

All modifications required by Engineer shall be implemented without any claim for additional costs. In the case that the Contractor does not agree with the changes required by Engineer, the Contractor shall send a written notification to Engineer within seven days from the date of receiving the modified drawing (drawings). In such case the Contractor shall again submit the specific drawing (drawings) and in relevant cases also the calculations in three copies after the Contractor considered Engineer's requirements.

No construction works shall commence before acquiring the valid building permit. The Contractor shall create sufficient reserve in his work schedule to acquire all required permits including the issues related to property rights.

The scope and content of the preliminary design for building permit is defined by the relevant regulation according to valid legislation in Montenegro.

5.1.7. Elaboration of the main design for the details for execution of works (Glavni projekat)

Within the Contract for Work, the Contractor shall elaborate and be responsible for complete main design in the scope according to section 1, including all its parts, opinions, permits, base documents and annexes in line with his work schedule approved by Engineer. The main design shall be elaborated by a qualified designer. The Contractor shall guarantee that the designer as well as the sub-contractors have the necessary skills, experience and presumptions for elaboration of technical draft and required main design.

The main design and technical draft shall be elaborated in compliance with requirements of relevant standards and shall include materials and equipment complying with general and specific Employer's requirements. The documentation approved by Engineer and the Employer shall be handed over in 6 copies + 2 copies in electronic form (texts in *.doc, *.xls formats, drawings as *.dwg).

The Contractor shall account for the fact that the machines and equipment offered by him meet hydraulic requirements/characteristics of the Work and any change implied by installation of a specific device shall be reflected in additional design of other equipment and construction works.

Contractor's design shall respect the principle of simplicity, reliability and long trouble-free operation of the designed equipment with low operation costs.

All delivered devices shall be designed as to meet requirements for proper operation under all possible operational loads, pressures and temperatures including the change of outdoor temperature. Special attention shall be paid to cold winter and hot summer conditions.

All materials shall be new and of the best quality and shall be chosen in order to resist stress caused by operation and external conditions in optimal/usual range without deformations or deteriorations affecting efficiency and reliability of the machine equipment. The Contractor shall ensure that the electric equipment is fully satisfactory and safe for use together with the offered machine & technological equipment.

Outdoor equipment shall be able to resist climatic conditions and shall be constructed in such a way as to prevent water impounding in any point. Metal-to-metal connections shall not be allowed and all external bolts and screws shall be equipped by blank tapped holes should the through hole allow moisture penetration. Where required, anti-climatic covers shall be provided to protect the equipment, devices and cables against weather conditions and direct sunlight. Mechanics shall be constructed from materials that will not choke due to rust, corrosion or dust. Uncovered bearings of operational shafts shall be constructed as to prevent moisture and dust inward penetration along the shaft.

The Contractor shall be responsible for checking the drawings of all sub-contractors, suppliers and manufacturers of control / switch equipment and also for all interference requirements that can be necessary. As soon as the Contractor is fully convinced that the drawings are correct, he shall inform the Engineer and submit copies of the drawings for approval. Engineer shall notify of the approval in writing.

When submitting the application for Engineer's approval, the Contractor shall hand over two printed copies plus one electronic version on CD ROM of all drawings and calculations in the following manner:

- in approx. 70 % for checking and clearance,
- in full completion for approval.

Engineer shall return one copy of drawings and calculations to the Contractor with his comments. Changes and/or comments provided by Engineer on drawings or calculations shall be implemented and the drawings and/or calculations shall be handed over again in two copies until they acquire final approval.

The approved drawings shall be marked as "Approved by Engineer". Works on any part of the Work construction shall only be allowed after the Contractor's drawings and calculations are approved by Engineer. Approval of Contractor's drawings and calculations including any changes made by Engineer shall not free the Contractor from his obligation to implement the Work in compliance with the Contract.

Any additional documentation elaborated by the Contractor shall not change the purpose and scope of Works described in these tender base documents. Costs related to elaboration of the involved documentation shall be included in the Tender Price.

All modifications required by Engineer shall be implemented without any claim for additional costs. In the case that the Contractor does not agree with the changes required by Engineer, the Contractor shall send a written notification to Engineer within seven days from the date of receiving the modified drawing (drawings). In such case the Contractor shall again submit the specific drawing (drawings) and in relevant cases also the calculations in three copies after the Contractor considered Engineer's requirements.

No manufacturing of machine equipment items shall commence before the manufacturer acquires Engineer's written approval of the drawings. The Contractor shall create sufficient reserve in his work schedule to acquire all required permits including the issues related to property rights. Any costs caused by not meeting this requirement shall be charged to the Contractor.

The scope and content of the main design is defined by the relevant regulation according to valid legislation in Montenegro.

If during the Contract implementation and in compliance with its conditions a need arises to modify the design documents delivered by the Contractor or to apply for new or modified permissions or approvals of authorised institutions for any activity carried out on the construction site, the Contractor shall be responsible for acquiring any of these permissions, licences, approvals, certificates etc. from authorised bodies or administrators/owners including preparation of relevant documents or designs. Before such works start, subject and scope of the documents or activity shall be again consulted and approved by the Employer and Engineer.

5.1.8. Elaboration of contractor's documentation for manufacturing preliminaries of the construction

Within his documentation, the Contractor shall be obliged to deliver two copies of text and drawing documents of building structures and machine & technological and electrotechnical equipment which does not comprise a part of the main design.

The scope and content of the Contractor's documentation is defined by the relevant regulation according to valid legislation in Montenegro.

This Contractor's documentation shall be approved by Engineer and the Employer before the works commence.

5.1.9. Work schedule

The Contractor is obliged to elaborate detail work schedule in compliance with general requirements of the Contract within 28 days after receiving the Engineer's instruction to commence the works. The schedule shall be realistic and shall reflect seasons of the year. The work schedule shall be in compliance with technological requirements of the Employer to implement the construction in such manner that it can be handed over in complete functional parts during the Work implementation. The work schedule shall respect seasons of the year and the period of increased level of ground water.

The work schedule shall include:

- All constructions and shall also reflect work schedules received from possible sub-contractors,
- Detail plan of machine utilization for individual structures,
- Number of work groups which shall be involved in piping installation,
- Number of work groups which shall be involved in construction of sewerage system connections,
- The Contractor shall, upon the information, document that the proposed number of work groups, machines and machine tools guarantee implementation of the Work within the contractual terms,
- For technological devices it shall contain individual state of construction readiness and technology deliveries of independent functional units and their main devices,

The work schedule shall be elaborated in the MS Project software and shall be completed by financial schedule elaborated in MS Excel. Both schedules are subjected to Engineer's approval.

5.1.10. Passportization (photo-documentation)

All temporal and permanent structures and their characteristics which could be negatively affected by the course of construction works shall be the subject of detail passportization. The Contractor is obliged to produce the passport of current situation of all structures in the endangered zone of each construction site before the works commence and document

accesses to the lots, status of adjacent buildings and roads (warning: bituminous layers of local roads may not comply with the heavy trucks loading), planting of private lots; he shall re-document them again after returning them to their original status. The passportization represents detail identification and documentation of technical status of the structures before the works commence. Special attention shall be paid to structures in close proximity of excavations, shafts and trenchless pipe lying, identification of their status with respect to possible settlement during and after the construction implementation.

The passport shall concurrently also be produced by digital camera and recorder and shall be archived at the Contractor in course of the whole period of the Contract duration.

For the structures where potential static failures may be anticipated the passport shall be completed by construction & technical survey elaborated by an authorised structural engineer. It shall contain detail list of all damages, faults and imperfections of the construction exterior and interior as well as information on the actual building (structure).

The passportization shall be provided with minimum possible advance of the actual construction. The passportization shall always include confirmation and approval of the structure owner. If the owner refuses to approve it or cannot be reached, the confirmation shall be provided in collaboration with the authority which permitted the construction, i.e. with the appropriate building office.

Detail passportization of technical status serves as a base document in potential settlement of conflicts regarding property damages.

5.1.11. Environmental protection in course of construction

In order to identify potential impacts on environment in relation to the implemented construction works, the Contractor shall elaborate and submit for Engineer's approval Action Plan for Environmental Protection / Control Plan of Activities related to environment and containing requisite corrective measures which shall be provided during the whole construction phase.

The plan shall include the following items while suggesting the ways of elimination or reduction of source pollution, apart from others:

- Hygienic facilities for construction personnel on the construction site,
- Disposal of excessive material from excavations,
- Recipient pollution by oils, impure water, construction materials and chemicals,
- Groundwater pollution due to construction activities,
- Discharge from construction site drainage systems,
- Noise,
- Air pollution,
- Order on the construction site.

Table: Control plan principles for activities affecting the environment

Project impact	Drafted reductions or supportive activities	Involved parties	Required preliminaries	Budgetary costs and time schedule for preliminaries	Budgetary costs and time schedule for Control Plan of Activities Related to Environment
Effects of the construction phase					
Job opportunities	Use of local human resources	Management The town of Danilovgrad	Notify contractors of this requirement	Without costs	Not specified / checked at concluding the Contract
Noise	Limit the working hours; mount silencers on operated devices; inform the public	The town of Danilovgrad; Engineer; Contractor	Information program on the construction phase	Costs of technical equipment	Usual budget for appointed staff of the town of Danilovgrad plus cost of local expert support for material elaboration, publishing and presentation; in turns throughout the construction period
Dust	Control the excavation works; cover the vehicles carting away excavated material	The town of Danilovgrad; Engineer; Contractor	Technical conditions according to the Contract	Not specified	Not specified
Odour	Identify and isolate the source / ensure the means to eliminate the odour in course of designing and operation; minimize the exposition; use packing material with covers for transportation	The town of Danilovgrad; Engineer; Contractor	Technical conditions according to the Contract	Costs of technical equipment	Usual budget for appointed staff of the town of Danilovgrad; occasional checking
Damage to planting	Check the construction site and ensure protection of trees and important plants where possible; reduce disturbing effects of construction activities	The town of Danilovgrad; Engineer; Contractor	Technical conditions according to the Contract	Not specified	Usual budget for appointed staff of the town of Danilovgrad; occasional checking
Pollution due to discharging untreated water	Correct collection, pumping, cart away and disposal; where required, ensure parallel services	The town of Danilovgrad; Engineer; Contractor	Technical conditions according to the Contract	Not specified	Usual budget for appointed staff of the town of Danilovgrad; occasional checking
Disposal of excavation material and topsoil removal to adjacent water body and sedimentatio	Reuse on the construction site as much as possible; dispose of excessive waste of properly managed excavation activities; check surface discharges	The town of Danilovgrad; Engineer; Contractor	Technical conditions according to the Contract	Not specified	Usual budget for appointed staff of the town of Danilovgrad; occasional checking

Project impact	Drafted reductions or supportive activities	Involved parties	Required preliminaries	Budgetary costs and time schedule for preliminaries	Budgetary costs and time schedule for Control Plan of Activities Related to Environment
n, disposal of building waste					
Visible impacts	Implement the construction in as short time as possible; keep the construction site clean and in order	The town of Danilovgrad; Engineer; Contractor	Technical conditions according to the Contract	Not specified	Usual budget for appointed staff of the town of Danilovgrad; occasional checking
Protection and safety of workers and public	Elaborate control plan of traffic and information marking; ensure fencing, constable and warning tables; use personal protections and prescribed procedures	The town of Danilovgrad; Engineer; Contractor	Technical conditions according to the Contract	Not specified	Usual budget for appointed staff of the town of Danilovgrad; occasional checking
Pollution of water bodies	Ban on discharging or disposal of construction material by throwing it to water	The town of Danilovgrad; Engineer; Contractor	Technical conditions according to the Contract	Not specified	Usual budget for appointed staff of the town of Danilovgrad; occasional checking

5.1.12. Information tables

The Contractor is obliged to manufacture, build and maintain 6 billboards resistant to climatic conditions, approved by Engineer and complying with the features defined in relevant legislation of Montenegro and EBRD (European Bank for Reconstruction and Development).

After the works are completed, the Contractor shall remove the billboards and install 1 commemorative table. The permanent commemorative table shall be placed on a well visible place accessible to public and shall also meet all the features defined in the relevant legislation.

The points of billboards and commemorative table installation shall be approved by the Employer after the Contract is signed in compliance with the approved work schedule of the construction Contractor.

The Contractor is further responsible for locating required number of information tables according to relevant legislation.

Cost of the information tables shall be included in tender offer.

5.2. Documentation in course of the work implementation

5.2.1. Building log

The Contractor is obliged to keep a building log throughout the whole construction and testing operation period in accordance with relevant legislation of Montenegro. The building

STRABAG AG

log shall form a part of the Contractor's documentation kept on the construction site. It shall contain records of all important events that happened during the Work implementation on the construction site in compliance with valid regulations.

Sole responsibility for keeping the building log is borne by the Contractor. The following persons are entitled to make records to the building log:

- Contractor, Employer, Engineer,
- Author supervision upon the contract concluded with the Employer, authorised geometrician of the construction,
- State inspection bodies, administrators / operators of other utility lines.

The Contractor is also responsible for keeping the assembly book which shall comprise a specific part of the building log. Both the documents shall be available to Engineer and inspection bodies throughout the whole duration of the Contract for Work. All records made by the Contractor or his representative in the building log shall be signed by the Contractor or his appointed representative.

The Contractor is not entitled to carry out and require refunding for any additional works unless they are notified to Engineer in advance, recorded in the building log and confirmed in written by Engineer.

If sub-contractors are employed, the main building log shall be kept where Engineer will write his instructions. It shall be the only relevant log in the case of any discrepancies. That is why the Contractor shall be obliged to copy all important data from sub-contractors' logs to the main building log on daily basis. Building logs shall be kept separately for each building structure.

5.2.2. Photo-documentation (passport)

The Contractor shall be obliged to elaborate repeated documentation after reconstituting each construction site in the form and scope of the passport before the construction commencement.

Concurrently, it is requisite to document the course of construction with stress laid on maintaining the Work quality, to document the covered structures, crossings with other utility lines etc. This part of the documentation shall also be included in gradual monthly reports of the Contractor.

5.2.3. As-built drawings (Projekt izvedenog objekta)

a) Geodetic survey of as-built documents

Detail geodetic survey of the Work shall be carried out as a part of the as-built drawings and the results shall be submitted to the Employer in both digital and printed versions in four copies:

The geodetic survey (GS) shall include the survey of newly constructed water supplies and related structures (e.g. pumping stations, shafts and other building structures).

D.O.O. VODOVOD I KANALIZACIJA DANILOVGRAD
STRABAG AG

It is mandatory to survey the above structures including the water supply connections, all utility lines and other services (both overhead and underground) if they comprise part of the construction, and also all reconstructions and re-layings. The geodetic survey is not mandatory for the existing structures and water supply connections.

It is prescribed to ensure positional and vertical survey of as-built documents of completed structures or, in the case of underground lines and structures, still uncovered ones by means of geodetic methods.

Requirements of as-built drawings survey are based on relevant legislation of Montenegro.

Geodetic documents shall comprise the following list of contents (for each building structure separately):

- Graphic elaboration of GS shall be provided in MicroStation in the *.dgn format,
- Geodetic survey shall be provided in the coordinate system used as a standard in Montenegro,
- Vertical survey shall be provided in the vertical system used as a standard in Montenegro,
- We require geodetic survey of topography and vertical alignment of the construction as-built documents including all sewerage system structures and facilities,
- Topographical and vertical survey of all parallel and crossing routes in relation to other utility lines / including those in providers administration,
- Whole construction of surveyed sewerage system routes including their crossings and routes parallel with other utility lines shall be surveyed before it is covered, which shall be confirmed by the Engineer's written opinion – shall be a part of submitted GS,
- When preparing the graphic version of GS, observe the attributes, graphic presentation of each service line, structure and facility according to GIS administrator rules,
- Before the GS is handed over, consult it with GIS administrator,
- GS for approval of individual constructions shall be submitted together with approved written approval of GIS administrator.

Content of the geodetic documentation:

Part Topography:

- Technical report,
- Geodetic data of the points of measuring network, list of points of detail topographic field – verification of the land registry office at the fixed points hand over (photo copy),
- General plot of points of detail topographic field .dgn – drawing of given and newly surveyed points,
- Measuring network.txt /*.doc/ - list of coordinates and altitudes of measuring network points; point number, coordinates x, y, z, description; given and newly surveyed points,

D.O.O. VODOVOD I KANALIZACIJA DANILOVGRAD
STRABAG AG

- Topography.dgn – contains implementation of all missing structures of the original topography with numbered structures,
- Topographic points.dgn - point number, coordinate "z",
- Topography.txt / *.doc/ - contains points of surveyed topography, point number, x, y, z,
- Control printout in the 1:500, 1:1000 scale.

Part Sewerage System:

- Sewerage.dgn – surveyed route of the sewerage and branch sewers including the structures and equipment, description of branches, material and pipe DN, decline and distances between shafts in compliance with the 18/2002 directive; dimension all important points of the sewerage from fixed topography points; use dimensions on normal; dimension all crossings with other utility lines,
- Sewerage points.dgn – point number, depth dimension H, coordinates z, ź, - place the dimensions as not to overlay z-coordinates in kanalizácia.dgn
- Sewerage.txt /*.doc/ - point number, coordinates x, y, z, ź, H, description
- Longitudinal section.dgn

Part Other Utility Lines:

- Other utility lines.dgn – plot of all utility lines which cross or run parallel with the surveyed pipe route, insert the depth "H" and indication of coordinates z, ź to layer 30
- Points of other utility lines.dgn - point number, coordinates z, ź
- Other utility lines.txt / *.doc/ - point number, coordinates x, y ,z ,ź ,H, description

The elaborate shall be verified by authorised geometrician.

b) Documentation of as-built drawings

The Contractor shall prepare and hand over to Engineer documentation of as-built drawings for all parts of executed Works on the level of the main design (i.e. updated technical report, site plan, sections, details etc.) in both printed and digital form (texts in *.doc, *.xls formats, drawings as *.dwg). Documentation of as-built drawings shall always be elaborated immediately after completing the specific part of the Work. Final version of the documentation of as-built drawings shall be approved by Engineer before the Acceptance Report is issued.

The Contractor is obliged to archive and update the Documentation of As-built drawings throughout the Contract duration and provide copies of the records, drawings and certificates to the Employer in regular intervals as instructed by Engineer. The records shall contain all details of all equipment and materials, construction processes, tests and test certificates.

Final copies of the Documentation of As-built drawings shall be handed over to Engineer in covers and properly marked one month before the anticipated date of issuing of the Acceptance Report together with documents on the course of complex testing and variations executed as a result of these tests.

The Documentation of As-built drawings, after approved by Engineer, shall be handed over to the Employer in 4 copies of both printed and digital form with the changes from the Basic design marked in colour.

c) Geometric Plans

The Contractor is responsible for elaborating geometric plans in suitable scale in such a form that is acceptable for the appropriate authority without further modifications carried out by the Employer. Number of the copies shall correspond with the number of Geodetic Survey elaborates.

The surveying and elaboration shall comply with relevant standards and instructions for work in topographic fields of points in current land register maps which shall be ensured by the Contractor. The elaborate shall be verified by an authorised geometrician.

5.2.4. Test plan

The Contractor shall execute all necessary tests on the construction site under operation conditions to allow the confirmation that all specifications were fulfilled to complete satisfaction of the Engineer. At least the following tests and revisions shall be carried out:

a) Program of individual testing

The Contractor shall elaborate and submit Engineer for approval Program of Individual Testing containing the scope, subject matter and time schedule of preliminaries including the requirements on operation, energy and media (provided by the Contractor).

The Contractor shall ensure functional tests of all equipment elements to provide their correct functioning within the electro-mechanic activities before the complex testing commences. Functional tests shall include verification of all protective devices, calibration and setting of the equipment in order to meet specific conditions of the construction site or the operation parameters. The aim of these tests is to simulate control of the system.

Individual tests comprise a part of technological equipment assembly; complete revision of machine equipment shall be carried out before they start.

After successful completing of tests and revisions of each equipment element as stated in this document, the Contractor shall put into operation the whole equipment as it would work under full operation conditions before the complex testing is carried out. The Contractor shall elaborate a report on successful individual testing.

b) Program of complex testing

The Contractor shall elaborate and submit Engineer for approval Program of Complex Testing containing the scope, subject matter and time schedule of preliminaries including the requirements on Employer's and provider's (operator's) collaboration in both manual and automatic operation.

Program of Complex Testing shall be in compliance with valid standards and legislation. Terms, places and testing methods shall be approved by Engineer. Unless Engineer

instructs otherwise (e.g. for operation reasons), complex testing shall last 72 hours of continuous operation with the use of substitute media (pure water) before the Acceptance Report is issued. Schedule of starting the technological units and complex testing schedule shall be included in the construction schedule.

Details of the Program of Complex Testing suggested by the Contractor shall be submitted to Engineer for approval six weeks before the tests commence. These documents shall also include preliminaries for complex testing (tests of partial equipment), measurement results of achieved values, reports on executed tests and conclusions of the equipment testing signed by the Employer and Engineer. The report shall mention how the groups of machines and equipment in mutual interconnections meet the required parameters at minimum, standard and maximum design flow as well as individual achieved parameters.

The Program of Complex Testing shall also include draft of procedures preventing serious pollution of the environment and especially the water courses (recipients) as a result of the tests.

5.2.5. Operation and maintenance manuals (training)), Project of maintenance of facility (Projekat održavanja objekta)

Before the complex testing starts, the Contractor shall ensure training for Employer's operation and maintenance personnel regarding the operation and maintenance of each technological device and the whole construction site according to the Personnel Training Program for each profession of Employer's operation and maintenance in the scope necessary for safe operation of the equipment. Separate training shall be provided to Employer's control room operators.

The goal of the training is to ensure that appointed Employer's workers gain the required knowledge about the installed technology, operation and maintenance of all equipment included in the project with the aim to secure proper continuous operation and maintenance of all Work components. Agenda and schedule of the training course shall be mutually agreed by both parties. Verification of sufficient training for Engineer shall be issued by the Employer.

Manual for the training program shall be elaborated in Montenegrin language in 12 printed copies and 1 electronic copy for each machine & technological device, electrotechnical device and device of automatic control systems for technological processes (ACSTP) for each operation, maintenance and control working sites and shall include especially:

- Description of the installed technology and its functions,
- Operation manual,
- Maintenance manual including maintenance schedule for ten years in advance after the construction works are completed,
- Quality control,
- Safety measures.

The Maintenance Manual shall define planned intervals between repeated adjustment and/or replacement of individual elements and list of all checking procedures required as an integrated part of a well prepared maintenance plan. The documents shall contain assembly, operation and maintenance guides for each device, revision reports, pressure tests etc.

A set of brochures, leaflets, instructions, diagrams, list of manufacturers etc. shall not be acceptable instead of the Operation Manual and Maintenance Manual but they may serve as additional material to these manuals.

All costs of the Contractor required to elaborate the manuals and ensure the training shall be included in the Tender Price.

The scope and content of the Project of maintenance of facility is defined by the relevant regulation according to valid legislation in Montenegro.

5.2.6. Operating instructions

a) Service and Handling Regulations (separate for pumping stations, sewerage systems) shall be elaborated in the Montenegrin language in compliance with valid legislation of Montenegro.

Service Regulations shall include regulations, instructions and documents on the delivered equipment. Service Regulations shall be divided to text and drawing parts.

The text part shall include especially basic characteristics of the pumping stations, instructions for their operation and service and handling regulations for the sewerage system, pumping stations and delivery piping. The drawing part shall include site plans, longitudinal sections, typical sections of main building structures, technological schemes, drawings of operation units, flow schemes, connection diagrams, schemes of radio communication etc. The Service Regulation shall also include first aid principles and fire regulations.

Contractor's designer shall elaborate the service regulations for permanent operation.

The Service Regulations shall be submitted for review including all annexes (e.g. description of ACSTP structure and algorithms) not less than 30 days before the permanent operation starts. It shall be handed over in both printed and digital versions in 6 copies.

All costs of the Contractor required to elaborate the Service Regulations shall be included in the Tender Price.

b) Lubrication plans

These documents shall include list of supplies of recommended lubricants and operation media (consumables) such as the oil sufficient for one year operation after successful approval of the whole Work. They shall be elaborated for complete machine equipment.

c) Specification of recommended spare parts

The Contractor shall be obliged to supply spare parts for all components of the Work or its parts during the whole guarantee period, i.e. within 24 months after the Acceptance Report is issued for the Work or its complete units in compliance with the Contract conditions. All costs related to purchase, transportation, storing and use of spare parts shall be included in the

STRABAG AG

Tender Price. The Contractor shall not be obliged to supply spare parts for the Work or its part after the guarantee period expires, with the exception of those parts that comprise standard delivery of machines and equipment.

The Contractor shall elaborate detail specification of spare parts for long-term operation (2 to 5 years) for all machines and equipment delivered to the construction site.

The documents shall also include service conditions for the designed machine equipment. The Contractor shall be obliged to ensure that all his contractors delivering the equipment or its parts sign service contracts with the Employer which shall also be valid after the guarantee period expiration. All machine and electrotechnical equipment shall be designed, delivered and assembled by the Contractor with the proviso that under the service conditions faults can be repaired within 48 hours. If the above proviso is not proved for a specific type of equipment that the Contractor wants to deliver, the Employer shall have the right to change the Contractor for this equipment.

d) Specification of routine repairs

The Contractor shall elaborate and submit to the Employer Specifications of Routine Repairs which the Contractor entitles the Employer to perform or faults which the Employer may repair within the guarantee period.

5.3. Documents for construction hand-over and approval

5.3.1. Documents to construction, technological and electrotechnical works

The Contractor shall elaborate the documents for hand-over of the Works in compliance with the following items:

- Complete Documentation of As-built drawings on the level of main design,
- Changes compared to the approved design documents agreed with Engineer,
- Detail geodetic elaborate with survey of the newly implemented construction in accordance with the above mentioned items,
- Geometric plans elaborated for contracts on burdens of easement,
- Quality certificates and elaborates, attests of used materials,
- Reports on execution of individual tests (tests of pipe water-tightness, tests of tanks water-tightness, pressure tests of pipes, tests of concrete strength, individual tests of machine & technological equipment),
- Records of the tests and approving opinions regarding telecommunication, water supply, gas and other connections or records of these tests made by administrators / operators in the building log,
- Documents on compaction of trenches in roads and foot paths (test reports),
- Revision reports on electrotechnical devices,
- Documents on complex testing and report of successful execution of complex testing,

- Building logs and records of the course of construction,
- List of common faults and their repairs,
- Complete documentation required for building permits,
- List of special tests on appointed technical devices according to relevant legislation of Montenegro,
- Documents required according to the waste law,
- Notification of the place and term of final approval to the appropriate work inspectorate,
- Handling and service regulations including the instructions for timely and proper maintenance,
- Accompanying documents to machines and equipment issued by their manufacturers,
- Specification of recommended spare parts for long-term operation,
- Documents to prove required characteristics of technological and construction deliveries (attests, certificates of quality and completeness of machines, equipment and materials according to relevant valid standards, reports on executed tests, reports of heat-treatment of materials, welding documents, documents on pressure tanks, reports proving the quality of used materials, connection materials and electrodes, static calculations for building and steel structures, strength and dynamic calculations for technological devices etc.)
- Documents to prove required qualities of electric devices and devices for measuring, control, telemetry and control room operation (attests, certificates of quality and completeness of machines, calibration reports of measuring devices and sensors, cards of throttling devices, equipment and materials according to valid standards, reports on identification of external effects according to valid standards, reports on protection setting, reports on tests execution, documents of motors and servomotors, initial revision reports according to valid standards, declarations of conformity proving that the products incorporated in the structure comply with the required technical regulations and specifications),
- Digital recording of executed camera tests of all implemented underground pipe networks proving their good status.

5.3.2. Documents to ACSTP

Documents to hand-over of the ACSTPs shall contain complete documentation of all devices and software provided under this Contract. The documents shall be written clearly, well formatted and indexed to serve as documents that are easy to understand and use. It shall be possible to complete it with higher versions of the systems in future and with annexes. In general, it shall be of the A4 format with ring binding.

Copyright of the documents shall be the property of the Employer.

Full procedures of the operation system

D.O.O. VODOVOD I KANALIZACIJA DANILOVGRAD
STRABAG AG

The Contractor shall provide full procedures of the operation system with detail information how to use ACSTP including the following parts:

a) Launching and starting the system

b) Operator interface including:

- Navigation on the screen
- Possibility to go in quest – list of alarms, printing of events and trends etc.,
- Warning of alarm situations,
- Control, e.g. start up of pumps, closing of valves etc.,
- All functions connected with each access level to the system.

c) Control of the program/activity by the operator

d) Control of the files on the disc by the operator

e) Transfer of files – archiving, recovery

f) Operator's response to errors, on-line and off-line diagnostics, transfer of control between computers, synchronizing of system database

Complete software documents

Complete specification of software shall be provided and shall contain system design, diagrams, logical diagrams, definitions of software, program indexes and system structure, and system data for each system and module.

Hardware manuals

The Contractor shall provide documents for all devices delivered within the contract.

PLC program documents

The Contractor shall provide one copy for each required PLC documentation according to PLC manufacturer's delivery.

Unless otherwise stated, the Contractor's documents submitted for the construction hand-over shall be elaborated:

- in 4 printed copies and 1 electronic copy in the terms according to the schedule elaborated by the Contractor but always at least 2 months before they are planned to be needed. Engineer's approval is required for these documents.

5.3.3. Schedule of documents submitting

The below stated schedule defines the list of documents that shall be submitted to Engineer for approval in compliance with the Contract. The Contractor shall elaborate "Program of Documents Submitting" defining times of hand-over of these documents.

The schedule of documents submitting relates to the actual project implementation and the term of its completion.

Table: Schedule of documents elaboration (CC – construction commencement)

A	Documents	Description	Number of copies	Time
A1	Contractor's documents during the Work implementation	Preliminary design, Main design or other as required	6 printed 2 digital	as required
A2	Operation and maintenance manuals, service regulations, project of maintenance of facility		6 printed 6 digital	for construction hand-over
A3	Documentation of As-built drawings	on the level of main design	6 printed 6 digital	for construction hand-over
A4	Geodetic survey of as-built drawings	including geometric plans	6 printed 6 digital	for construction hand-over
A5	Documents for Construction Hand-over		6 printed 6 digital	for construction hand-over

B	Programs	Description	Number of copies	Time
B1	Work schedule		3 printed 1 digital	as required
B2	Individual Testing Plan		3 printed	as required
B3	Complex Testing Plan		3 printed	as required
B4	Operator's Training Plan		6 printed	as required

C	Occupational health and safety, environmental protection	Description	Number of copies	Time
C1	Quality Assurance Plan and Quality Control Plan		2 printed	as required
C2	Plan of Environmental Protection		2 printed	as required
C3	OHS log		2 printed	on monthly basis

D	Reports	Description	Number of copies	Time
D1	Monthly records of executed works		6 printed 1 digital	on monthly basis
D2	Final report		6 printed 1 digital	for construction hand-over

All of the documents or activity shall be revised and approved by the Employer and Engineer.

Revision of documents will be done in accordance with national relevant legislation.

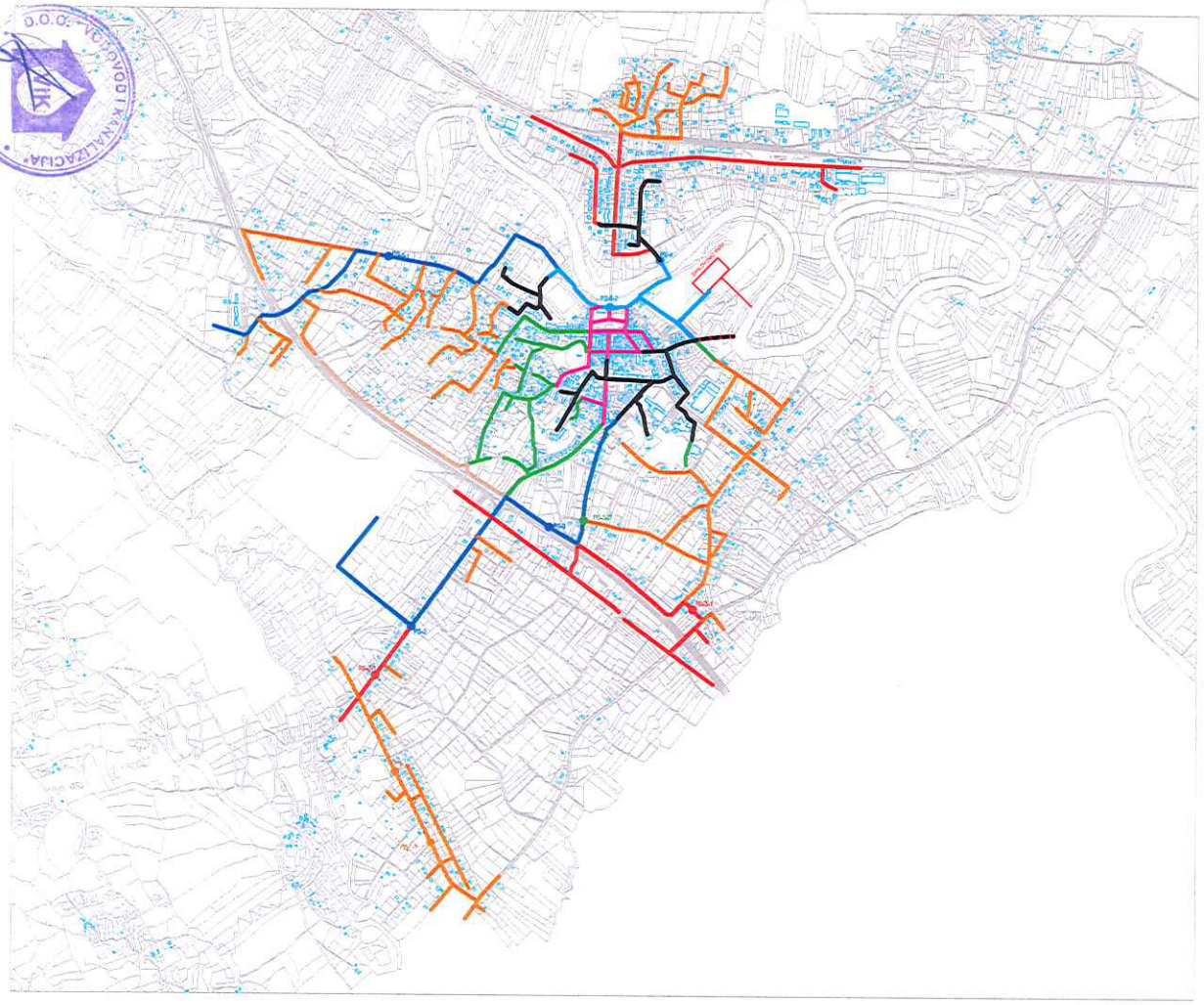

LEGEND:

- DESIGNED DANILOVGRAD WWTP
- RECONSTRUCTED EXISTING SEWERAGE SYSTEM
- DESIGNED SEWERAGE SYSTEM - 1. ZONE
- DESIGNED SEWERAGE SYSTEM - 2. ZONE
- DESIGNED SEWERAGE SYSTEM - 3. ZONE
- DESIGNED SEWERAGE SYSTEM - 4. ZONE
- DESIGNED SEWERAGE SYSTEM - 5. ZONE
- DESIGNED SEWERAGE SYSTEM - 6. ZONE
- DESIGNED SEWERAGE SYSTEM - 7. ZONE

EMPLOYER	D.O.O. "Vodovod i kanalizacija" Danilovgrad	LOCATION	Danilovgrad
PROJECT:	Danilovgrad Municipal Infrastructure Project Rehabilitation of sewerage	STATE	Montenegro
		DATE	June 2017
		STAGE	Tender Document
		FORMAT	2 A4
		SCALE	1:20 000
PART No.	Volume III.ii The Requirements - Drawings	SET	
DRAWING:	General Plan of Sewerage System	No.	III.ii.1

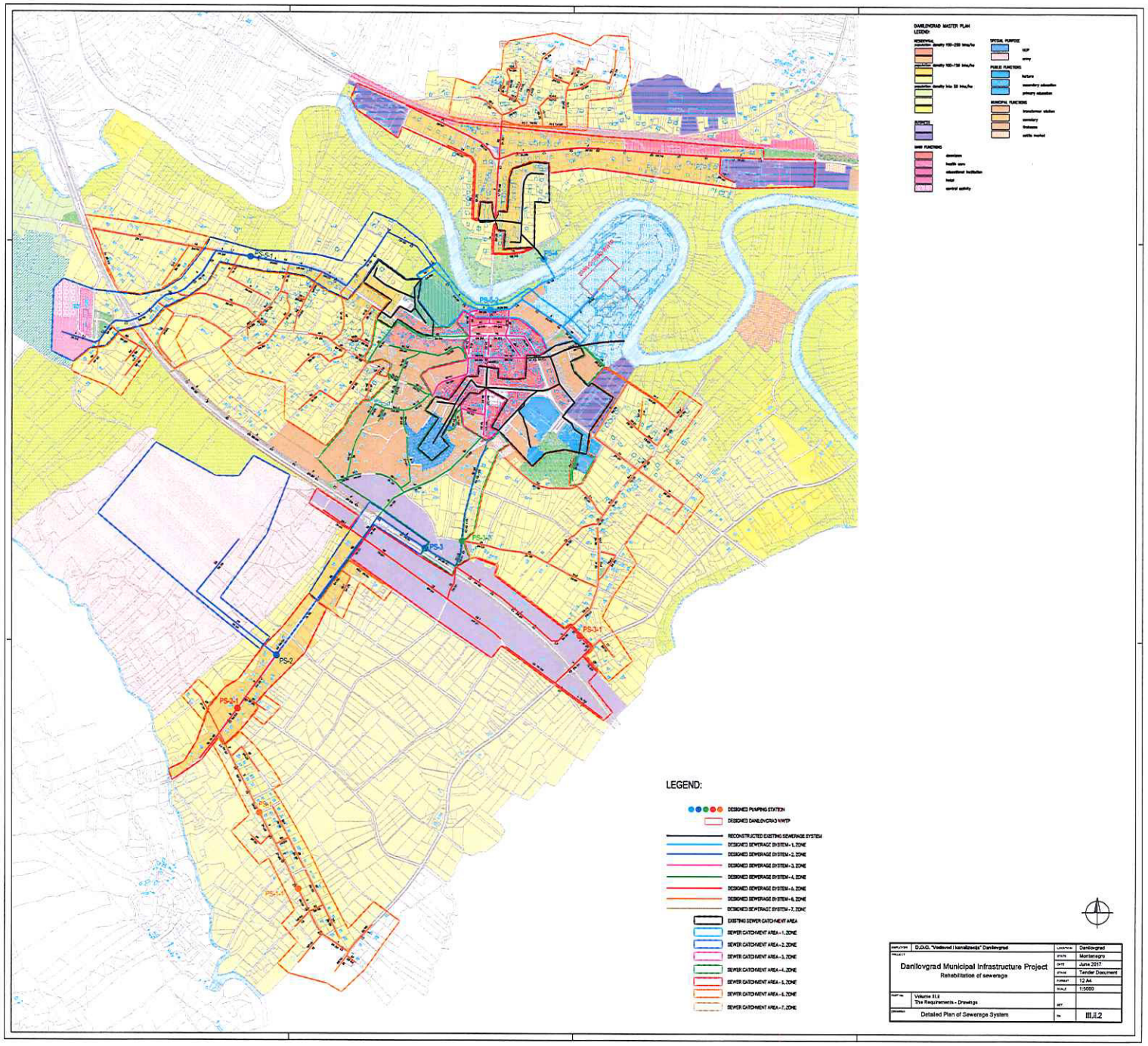
DANILOVGRAD MASTER PLAN
LEGEND:
RESIDENTIAL
BUSINESS
MIX FUNCTIONS
SPECIAL PURPOSE
PUBLIC FUNCTIONS
MUNICIPAL FUNCTIONS
LEGEND:
DESIGNED PUMPING STATION
DESIGNED DANILOVGRAD WWTP
RECONSTRUCTED EXISTING SEWERAGE SYSTEM
DESIGNED SEWERAGE SYSTEM - 1. ZONE
DESIGNED SEWERAGE SYSTEM - 2. ZONE
DESIGNED SEWERAGE SYSTEM - 3. ZONE
DESIGNED SEWERAGE SYSTEM - 4. ZONE
DESIGNED SEWERAGE SYSTEM - 5. ZONE
DESIGNED SEWERAGE SYSTEM - 6. ZONE
DESIGNED SEWERAGE SYSTEM - 7. ZONE
EXISTING SEWER CATCHMENT AREA
SEWER CATCHMENT AREA - 1. ZONE
SEWER CATCHMENT AREA - 2. ZONE
SEWER CATCHMENT AREA - 3. ZONE
SEWER CATCHMENT AREA - 4. ZONE
SEWER CATCHMENT AREA - 5. ZONE
SEWER CATCHMENT AREA - 6. ZONE
SEWER CATCHMENT AREA - 7. ZONE
PS-1
PS-2
PS-3
PS-3-1
PS-3-2
PS-4
PS-4-1
CWW CONNECTION
D.O.O. "Vodovod i kanalizacija" Danilovgrad
Danilovgrad
Montenegro
Danilovgrad Municipal Infrastructure Project
Rehabilitation of sewerage
June 2017
Tender Document
1:5000
Volume III.II
The Requirements - Drawings
Detailed Plan of Sewerage System
III.II.2

ATTACHMENT 2 - PRELIMINARY PROGRAMME

i) SITE ORGANISATION AND METHOD STATEMENT

The Tenderer shall provide general description of the arrangements and method statement which the Tenderer intends to adopt for the execution of the Works. The Tenderer's arrangements and method statement should demonstrate their adequacy for satisfactory execution of the Works in conformity with the Tender Document.

In case of a JVCA, as part of the Method Statement, the Tenderer shall fill in the following table including information on the parts of Works that will be carried out by each partner of the JVCA.

Name of partner in JVCA	**Description of works to be carried out**	**Estimated value in EURO**	**% of Accepted Contract Amount**
Leading Partner:			*(min. 40%)*
Partner 1:			*(min. 15%)*
Partner 2:			*(min. 15%)*
Etc.			*(min. 15%)*
Accepted Contract Amount / %		***fill in value***	**** fill in total %***

* min. 70% of Accepted Contract Amount for a JVCA

STRABAG
STRABAG AG

CONSTRUCTION TECHNOLOGY

(METHOD STATEMENT)

GENERALS

Subject to Contract is shown into the table below:

Structure	Designed scope	Built-up scope	Unit
Existing sewerage system reconstruction	3,171	3,171	m
New gravity sewerage system	28,834	5,479	m
Pumping stations	10	5	pc
Delivery piping	1,243	1,174	m

The Works are divided in seven zones and can be summarized as follows:

- Zone 1 – is the design and realization of separate sanitary sewerage incl. public sections of house connections in order to ensure reliable wastewater collection to the Danilovgrad WWTP. The sewerage system will be designed as a gravity type, due to the flat character of the area pumping is expected
- Zone 2 –is the design and realization of separate sanitary sewerage incl. public sections of house connections in order to ensure reliable wastewater collection to the Danilovgrad WWTP. The sewerage system will be designed as a gravity type, due to the flat character of the area pumping is expected
- Zone 3 – is the design and realization of separate sanitary sewerage incl. public sections of house connections in order to ensure reliable wastewater collection to the Danilovgrad WWTP. The sewerage system will be designed as a gravity type.
- Zone 4 – is the design of separate sanitary sewerage incl. public sections of house connections in order to ensure reliable wastewater collection to the Danilovgrad WWTP. The sewerage system will be designed as a gravity type, due to the flat character of the area pumping is expected.
- Zone 5 – is the design of separate sanitary sewerage incl. public sections of house connections in order to ensure reliable wastewater collection to the Danilovgrad WWTP. The sewerage system will be designed as a gravity type, due to the flat character of the area pumping is expected.
- Zone 6 – is the design of separate sanitary sewerage incl. public sections of house connections in order to ensure reliable wastewater collection to the Danilovgrad WWTP. The sewerage system will be designed as a gravity type, due to the flat character of the area pumping is expected.
- Zone 7 – is the design of separate sanitary sewerage incl. public sections of house connections in order to ensure reliable wastewater collection to the Danilovgrad WWTP. The sewerage system will be designed as a gravity type.
- Reconstruction of existing sewerage system - is the design and realization of separate sanitary sewerage incl. public sections of house connections in order to ensure reliable wastewater collection to the Danilovgrad WWTP. The sewerage system will be designed as a gravity type.

The estimated period for completion of works is 600 calendar days.

Logistic

To enable the works to proceed according the proposed program and period of traffic disruption minimized, it is intended to put in place management system to ensure that all essential materials required on site, such as pipes, fittings, concrete, reinforcement, fuel or replacement parts for plant or equipment, are delivered timely and in accordance to the contractual requirement.

The Contractor shall comply with laws, technical standards and regulations in force in Montenegro.

Survey and setting out

Within the agreed time after the date of Commencement, all lines, levels, benchmarks and coordinates, or other relevant existing surveying documents upon which the design of the works has been based, shall be verified to their accuracy before they are being used.

All the control points and level benchmarks shall be marked clearly and shall be maintained throughout the construction period. These include keeping records and design of as built drawings.

Quality assurance management system

QAMS shall be instituted by Contractor as to comply with the requirements of the Contract. All conditions and instructions linked to the QAMS and its institution will be done as described in the general items specification.

Traffic management

Works are supposed to be done under the traffic, so it implies that higher attention to traffic safety must be paid in order to prevent accidents.

Activities under this contract will be in collision with traffic on existing roads. Design for temporary traffic regulation will be prepared and signalization will be installed. Special attention will be drawn not to disturb the flow of traffic as much as it may be possible.

During the construction, trucks will use existing roads and streets.

METHOD STATEMENT OF THE MAIN ITEMS

At the beginning of the Works, a visible panel will be placed during all the execution works, for identifying the site, according to Montenegrin standards.

General items and mobilization

a) Staff and Workers

All staff engaged on the works shall be suitably qualified and experienced for the duties they will be required to perform. Training shall be provided if and as necessary, to ensure skills are maintained at the required levels. Staff shall be chosen from different sources, but all personnel shall be combined into an integrated team working under the direction of the Project Manager.

The staff constituting the initial team shall be drawn from our own and will ensure a rapid and efficient startup of the works.

The staff dispatched for works on this contract is detailed in Organization Chart for this Project and in Key Personnel list.

b) Plant and Equipment

Following the receipt by the Engineer of the "Order to Commence", equipment shall be

STRABAG AG

transported to the site immediately.

Asphalt, concrete material, sand and gravel material, will be purchased from existing plants in Montenegro.

Equipment list is more detailed in the attached list of major items of plant and equipment and therefore not entirely mentioned here.

Employer's and Contractor's Offices, Accommodation and Stores

(1) Contractor's Office

Main office shall be located at the site organization.

(2) Requirements and Provisions for the Engineer

Preliminary works

Removal of bushes and trees, protection of trees, demolishing of existing facilities, demolition of pavement on existing road and site clearance

Grubbing of bushes and trees shall be made with the excavator or/and bulldozer and transported to the dumping area. Trees will be treated with special concern (adequate protection will be installed if necessary) in order to protect it from damages during execution phase. Demolition material of pavement on existing road will be loaded and transported to the dumping area by trucks. Removal of the hard material is done by combination of excavators with hydraulic hammer and joint cutter. Depending on the areas of the section, part of these works shall be performed manually.
Mechanical mowing and site clearing shall be made with excavator, excavator/loader and transported to dumping area by trucks.

Construction of pipework

Construction of pipeline will be done with two teams at the same time.

Earth works
Following points should be considered during trench excavation:

a) Take necessary safety precautions to ensure a safe working environment.
b) Prevent water penetration into the trench.
c) During excavation, make sure that trench walls keep vertical position.
d) For a flat bedding, remove all obstacles and sharp edges such as rocks, gravels, concrete, etc. from the trench.
e) Remove all organic items such as plants, tree roots, etc. from trench ground.
f) Ensure that trench ground is strong and stable.
g) If the trench ground is not stable enough, increase trench depth for stabilization works.
h) Discharge water (if there is any) from the trench before bedding preparation.
i) Ensure that trench width is sufficient enough for bedding and backfilling compaction works.
j) Ensure that excavated materials are piled at a distance from the trench to avoid the possibility of rolling back into the trench.

Excavation to a sufficient depth and width to enable the pipe and joint, shoring, bedding, will be done with excavator.

All topsoil shall be stripped with a layer of 30cm thickness from those areas affected by temporary and permanent works including compound areas and stored for re-use.

Joint holes shall be dug by hand below the bed of the trench in advance of the pipe being laid in the trench, or bedding where specified, to ensure that each pipe is supported throughout the length of

STRABAG STRABAG AG

its barrel and to enable the joint to be made, and to ensure satisfactory backfilling of the hole by hand after the joint has been made.

Levelling of the trench base to the exact direct level and slope in the profile, shall be done with an accuracy of +/- 2 cm. Excavated places shall be filled up to the required level with fine gravel or course sand and properly compacted before the pipe lowering.

Trenches shall not be excavated too far in advance of pipe laying and shall be sufficiently wide to allow prior and efficient jointing to be carried out in clean and dry conditions.

Levelling of the trench base will be done to the exact direct level and slope in the profile. Excavated places shall be filled up to the required level with fine gravel or course sand and properly compacted before the pipe lowering.

Where welding or jointing of pipes and/or accessories is required to be done in the trench, the trench shall be widened and/or deepened to form bell-holes.

Trenches will be with safe and secured sidewalls slopes.

Quantities which are required for later utilization will be transported to storage, or dumping area.

Shoring of trenches will be done with using of frames type SBH, Krings or similar.

Detail of supporting systems



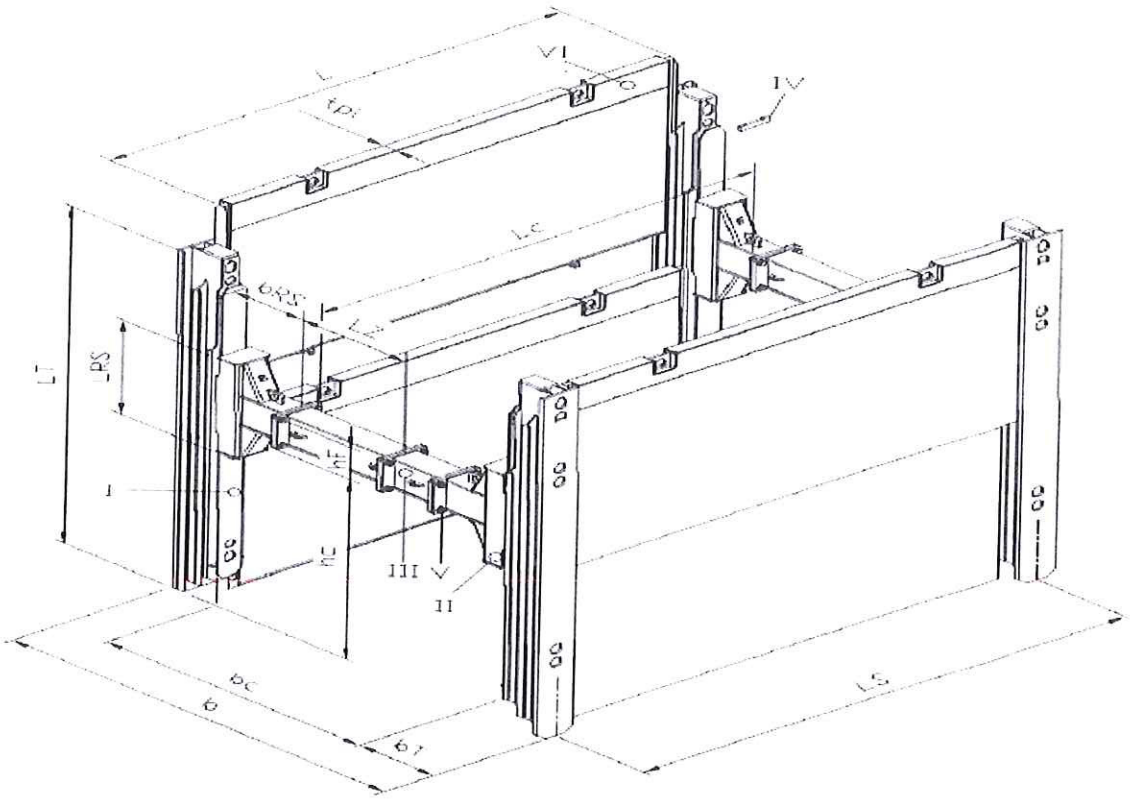
VI
IV
LC
LRS
LT
I
III V
II
LS

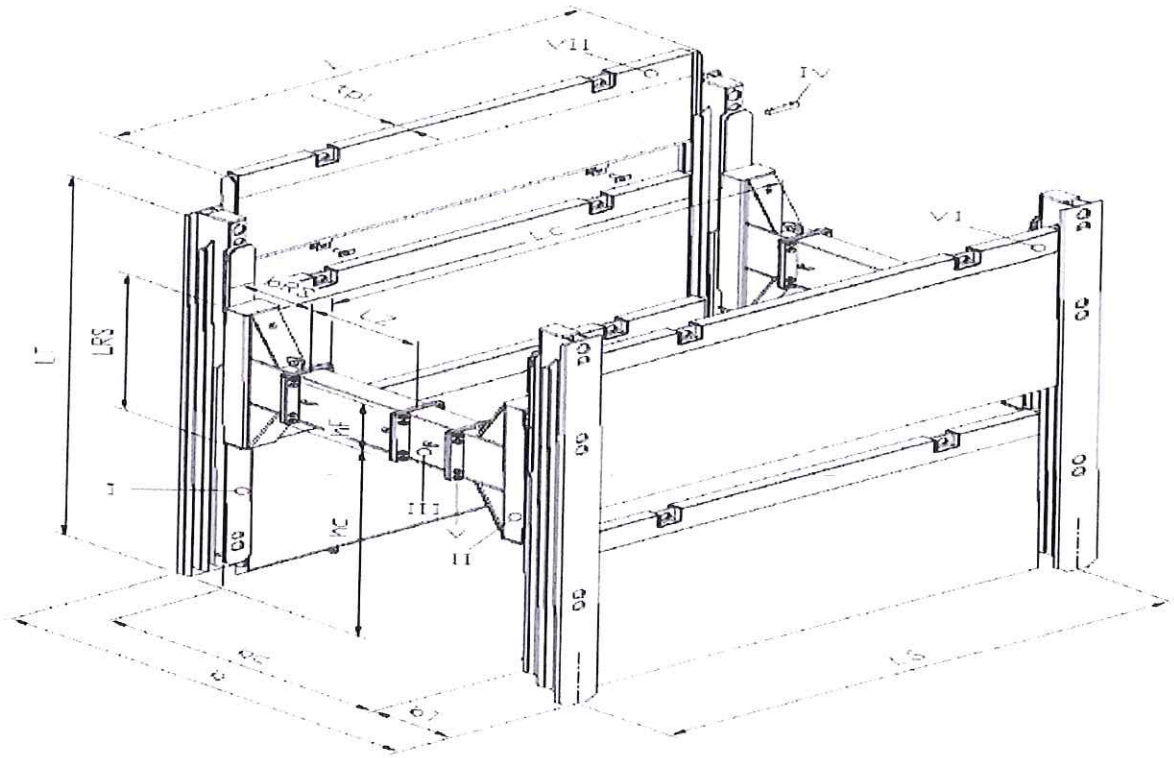
VII
IV
VI
LC
LRS
LT
I
III V
II
LS

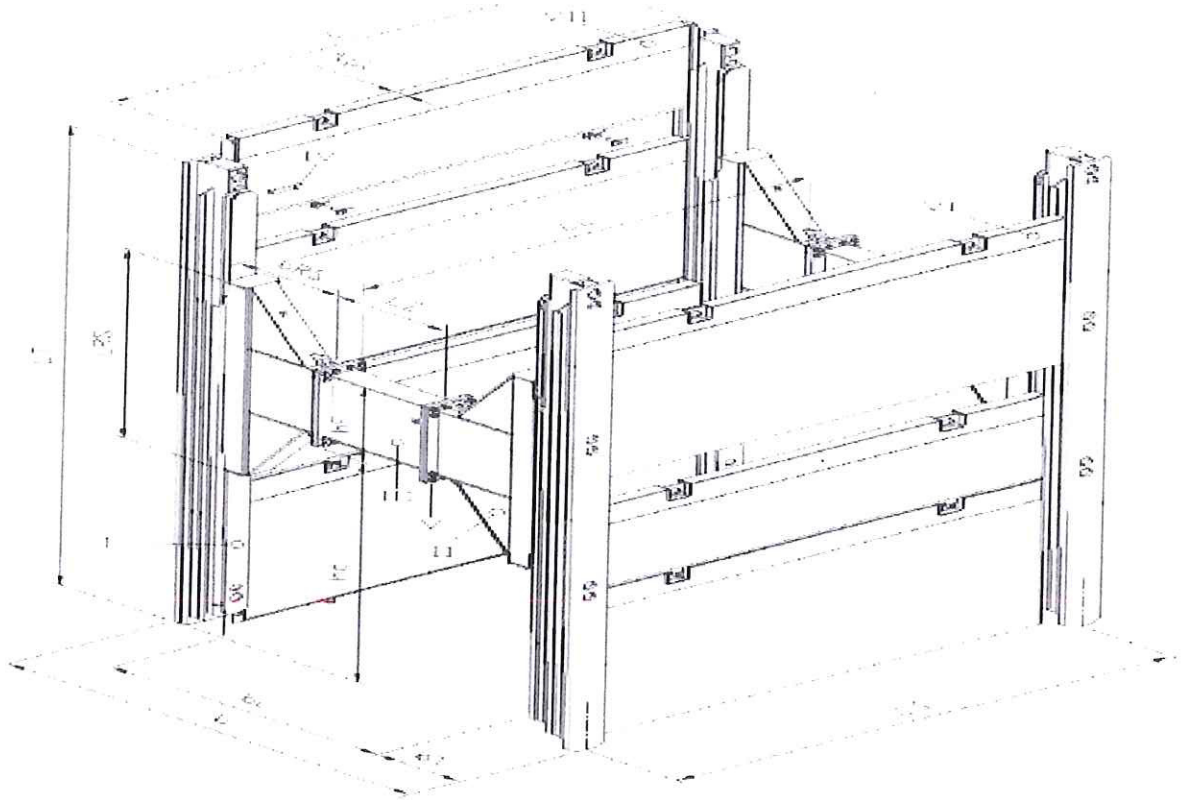

Water pumps will be used for dewatering, where it is necessary. Dewatering equipment will be provide for dewatering of the pipe trench and the manhole pits. Pipe trenches must be kept free of surface or ground water. The method of keeping the excavations clear of water, dewatering and the disposal of water, shall be subject to the approval of the Engineer.

No backfilling shall be placed around water retaining structures until the structure has been satisfactorily tested or before the Supervisor's consent is obtained.

Small manually-manoeuvred compaction equipment is required to ensure that the granular materials are well compacted up to the edges of the excavation.

Backfill material under, around and above pipes is fin sand which will be placed in several layers. Each layer must be compacted according up to required compaction level according to valid technical regulations. Sand will be provided from local borrow.

Backfill in areas with traffic load will be done with fine gravel material. Gravel will be provided from local borrow.

Backfill used in areas that are not subject to traffic loading or verges shall not be fully compacted. In these areas backfill shall be placed with adequate compaction to prevent formation of surface depressions but allowance shall be made for settlement.

Pipe laying and mounting

Pipes and fittings for all applications shall be factory made. The source of materials is given in separate attachment.

After completion of trench excavation and bedding, installation can start in line with the project. Pipes and fittings should be stored along the pipeline next to the trench according to the daily

STRABAG AG

installation program for a faster and easier installation. Stored goods should not block the working path of the construction machines such as crane, excavator, bulldozer, etc.
Pipes will be laid with excavators. Coated pipes shall be handled with suitable slings which in order to avoid any damage neither pipe nor coating. A sufficient number of lifting machines (e.g. side-booms) shall be used to ensure that the pipe is not subject to detrimental stresses. Pipes must be laid carefully without sharp moves and free fall laying.

All pipes and fittings shall be in accordance with relevant standards.

Pipe connections will be executed with fittings (couplings, bends, tees, reducers) and sealant (rubber rings). All together forms the pipeline entirety.

All pipes must be laid in accordance with designed fall. Determination of elevation points will be done daily with levelling instrument.

All welding works shall be performed under the most convenient working conditions, utilising modern, effective equipment and techniques and latest welding technologies. All welding shall be performed by welders qualified and experienced in the particular type of welding required. One of these procedures will be used:

- Shielded Metal Arc Welding (Stick) SMAW
- Gas Metal Arc Welding (MIG/MAG) GMAW
- Flux Cored Arc Welding FCAW

Records of welding procedures and welder performance qualification tests for work done shall be maintained by the Contractor for review by the Supervisor.

After Supervisor's review, anticorrosive protection shall be done on welds.

Pipes shall be filled and tested in sections of convenient lengths, which must not exceed 500 m. Where pipes are laid with steep gradients the length of pipes tested at any one time shall be as directed by the Supervisor.

Item	Equipment	No.
Laying and welding of pipes	Crane	1
	Crawler excavator, trencher	2
	Hydraulic hummer	1
	Trucks	2
	Rollers	2
	Vibrating plate	2
	Welding equipment	3
	Workers	9
	Welders	6
	Locksmiths	6

After all mounting works on one section is finished, hydraulically testing CCTV will be performed.

Construction of concrete structures

(1) Concrete

All concrete mixtures-classes that are specified for structures within this Contract are produced

STRABAG AG

following the requirements of Montenegrin standards. These standards are applied to all constituents of the concrete and are defined in the Technical Specifications and in the details of design of concrete structures.

Mixture is made in central concrete plant – located within the area of Podgorica, and every mixture must have valid certificate of quality.

(2) Transportation of concrete

Concrete produced at the plant will be transported by mixer trucks.

Calculation of transportation time for our site and number of mixers will be done so as not to have time gaps once the concreting on the site has begun.

(3) Formwork assembling

Formwork will be executed using system solutions. For structures construction formwork appropriate type will be used. All elements of the formwork that will have a contact with the concrete will be projected with the adhesive agent before placing the concrete.

(4) Concreting

Concrete is placed either with the pump, or from the mixers, depending on the type of the element. Placing of the concrete is done in layers of certain thickness depending on the technology defined in the standards (here applicable) for each element – walls, foundations, etc. Compacting of the concrete is done with different types of vibrating tools.

(5) Concrete curing

This activity, specially its duration is defined with the standards. It is being achieved with constant watering of the elements till it reaches its bearing capacity and designed quality.

Construction of manholes

Construction of manholes will be done with two teams. Manholes and chambers shall be constructed in either pre-cast or cast in situ concrete and shall be watertight.

Concrete manholes shall be made in accordance with conditions for concrete and steel works.

Prefabricated GRP manholes shall be of tangential type.
Prefabricated elements of each sewer manhole are: prefabricated RC finish slab for mounting of a sewer manhole cover, cast-iron covers having a diameter of 600 mm (load class as specified), equipped with locking device and including frame, body of a sewer manhole made of vertical GRP pipe, access ladder made of stainless steel.

All materials are prefabricated and will be installed on site.

Item	Equipment	No.
Production	Concrete plant	1
Transport	Concrete mixing - Auto mixer	1
Placing of concrete	Compressor	1
	Vibrators of dif. type	2

Workers	Carpenters	3
	Concrete workers	2
	Workers	2

Reconnection or connection of existing sewer lines will be executed under operation conditions. During any replacement or any construction work in the sewer system, shall maintain the normal sewage flow until the connections to the new sewer system have been made. Interruptions of the sewage flow shall be kept to a minimum.

Pavement works

Construction of blanked course of crushed stone material

Material for unbound stone material for base course layer shall be placed, spread, broken down, watered if necessary and oversized material shall be removed and the layer compacted, all in accordance with Technical Specification. Material from stone pit will be used. Quality of the crushed stone material has to fulfil all requirements defined in the technical specification.

Item	Equipment	No.
Leveling	Grader	1
Watering	Road water tanker	1
Compaction	Vibrating roller	1

Construction of bearing and wearing course

All materials that are to be used in the Pavement Construction will fulfill conditions and requirements defined in Technical Specification.

Production of the mixture will be performed on local asphalt plant.

- Production of the asphalt mixture

Bituminous binders are stored and are mixed at the temperatures prescribed in specifications. Production of the mix is done in using asphalt plant. Material that is used for the production is of quality described in the specifications.

- Transport to the site

The asphalt mix shall be transported by tipper trucks with sufficient quantity of trucks to avoid any interruption to the laying equipment. The carrying bodies of the vehicles shall be sprayed with agents protecting the mix from adhering. While driven, the vehicles carrying bodies shall be covered by tarpaulin covers.

- Laying of the material

The mix shall be delivered to pavers with heated screed; the pavers shall be equipped with an automatic level and cross fall control system. The temperature of the asphalt mix in site shall be as prescribed in specification. The working speed of the pavers is defined as well. Paving shall be stopped if the weather conditions are not as required.

STRABAG STRABAG AG

Cleaning and drying of the laying surface shall be done with adequate machines (cistern), and spraying of the base with emulsion sprayer - priming.

- Compacting of the layers

The layer of asphalt concrete base course shall be compacted with suitable set of rollers, which shall guarantee obtaining the required compaction index of asphalted mixture according to accepted standards and specifications.

The rolling works demand that: material is not excessively displaced in a longitudinal or transverse direction, no cracks are formed, the uniform densities, where rollers cannot perform compaction smaller vibratory rollers are approved. The numbers of rollers passes shall be determine in accordance with technical specifications, design and field conditions.

Item	Equipment	No.
Asphalt mixture preparation	Asphalt plant	1
Laying of asphalt mixture	Finisher	1
Compaction of asphalt mixture	Rollers tandem	2
Transport	Tipper truck	6
Cleaning of laying surface	Spraying machine Water cistern	1 1
Workers	Asphalters	5

ENVIRONMENTAL PROTECTION

MEASURES OF ENVIRONMENTAL PROTECTION ON THE CONSTRUCTION SITE

1. PROTECTION FROM AERIAL POLLUTION

a) DUST ROADS
- Dust roads will be wetted with water on regular basis.
- Driving speed for transport vehicles will be limited to 20 km/h.
- Cleaning (washing) area for the moveable construction equipment, for example truck mixer, excavator etc, will be installed.

b) CONSTRUCTION WORKS
- Workers that are qualified for that kind of operations will perform construction works.
- Water will be used to wet the work surfaces.

c) CONSTRUCTION MACHINES AND VEHICLES
- Construction machines and vehicles will be maintained in appropriate working order
- Technical checks and registration of vehicles will be performed within prescribed deadlines

2. PROTECTION OF WATER AND SOIL FROM POLLUTION

1. During transfer of fuel from fuel cistern into tanks of construction machinery, care has to be taken to prevent spilling of fuel.

STRABAG AG

2. During manipulation with oil and grease, care will be taken to prevent their spilling.
3. Despite taken care, if spilling occurs, sanitation measures will be undertaken.
4. Organic and non-organic waste will not be disposed off at the construction site or near pipelines carrying drinking water. This type of waste will be collected in prescribed containers and disposed off at, for this purpose, selected waste dump.
5. Sanitary facilities will be placed at locations from which sanitary wastewater is not endangering water sources.

3. PROTECTION FROM NOISE POLLUTION ON THE CONSTRUCTION SITE

1. Construction machines and vehicles will be maintained in appropriate working order.
2. Only vehicles that passed technical inspection will be used.
3. Workers that are qualified for that kind of operations will perform construction works.

4. OTHER MEASURES OF ENVIRONMENTAL PROTECTION ON THE CONSTRUCTION SITE

Beside afore mentioned measures of protection of environment, other general measures of protection will also be implemented:

1. Material used in construction will be properly stored.
2. Tidiness on the construction site will regularly maintained.
3. After completion of works, area around the construction site as well as environment will be returned in previous condition.
4. If there is change in construction technology or additional construction works are contracted which would affect the environment, authorized person on the construction site will inform Department for work safety of the contractor, which will then perform additions to existing environment protection measures.
5. Authorized persons on the construction site will inform immediate executors with contents of this environment protection measures. All participants in the project will oblige themselves to adherence to those environment protection measures in written form.
6. During construction the following actions should be undertaken:
   -Control of surface and ground water during construction;

   -Organize all site work so as to keep any nuisance due to noise, dust, odours, contamination of roads, rivers, water bodies soils to a minimum;

   -Use of walls to prevent crash risk in areas where possible;

   -Control noise of heavy machines;

   -Delimit clearly working area, to prevent unnecessary ecological damages;

   -Waste materials should be removed to appropriate landfills, and in any case not left near the working area;

   -Contractor will ensure adequate handling and storage of wastes and raw materials, and will in particular implement appropriate methods and procedures where it concerns hazardous material;

   -Contractor will undertake a waste stream inventory and will, for each type of waste, identify appropriate ways for reduction, handling and storage, re-use, recycling and disposal;

   -Where needed adequate erosion prevention measures will be implemented to prevent soil erosion and to protect watercourses from silting;

   -Maintenance of machinery and vehicles must be done periodically;

   -No waste materials may be disposed of off-site without the prior approval of the competent Authorities.

STRABAG AG

ii) MOBILISATION AND CONSTRUCTION SCHEDULES

The Tenderer shall provide information and/or schedule showing the order in which the Tenderer intends to carry out the Works including the anticipated timing of each stage of the performance of the Contract including but not limited to:

a) mobilisation of the Contractor's Plant and Equipment;

b) execution of each key construction activity including anticipated construction rates and estimated timing for commencement and completion;

c) details relating to the sources of the key materials, estimated transportation distances for the materials;

d) other information as the Tenderer deems relevant or appropriate.

STRABAG AG

Ortenburgerstraße 27
A-9800 Spittal/Drau, Austria

Telefon +43(0) / 4762-620-0
Telefax +43(0) / 4762-4962
www.strabag.com

STRABAG

Rehabilitation of Existing and Construction of new sewer Danilovgrad
EBRD ME DAN 90000

Location of main office

Main site office including Engineer's office will be located in Danilovgrad. Movable containers with site toilets for offices, storage and terrain laboratory will be located on the site.

Procurement of materials will be harmonized with the progress of works so that the local storage areas will be kept to a minimum. Main construction materials as pipes, fittings, covers and connection parts will be provided from certified and previously approved producers, and will be delivered to the site accompanied with transportation and package lists.

Asphalt, concrete and stone material will be provided from local plants, borrow pits and quarries in Montenegro on the nearest possible locations: Podgorica.

Companies Register: FN 61689w, Provincial Court Klagenfurt, Seat of Company: Spittal/Drau, Austria,
UID-Nr.: ATU 14487107, DVR 0009008, www.strabag.com

STRABAG
STRABAG AG

OFFICE FOR SUPERVISOR

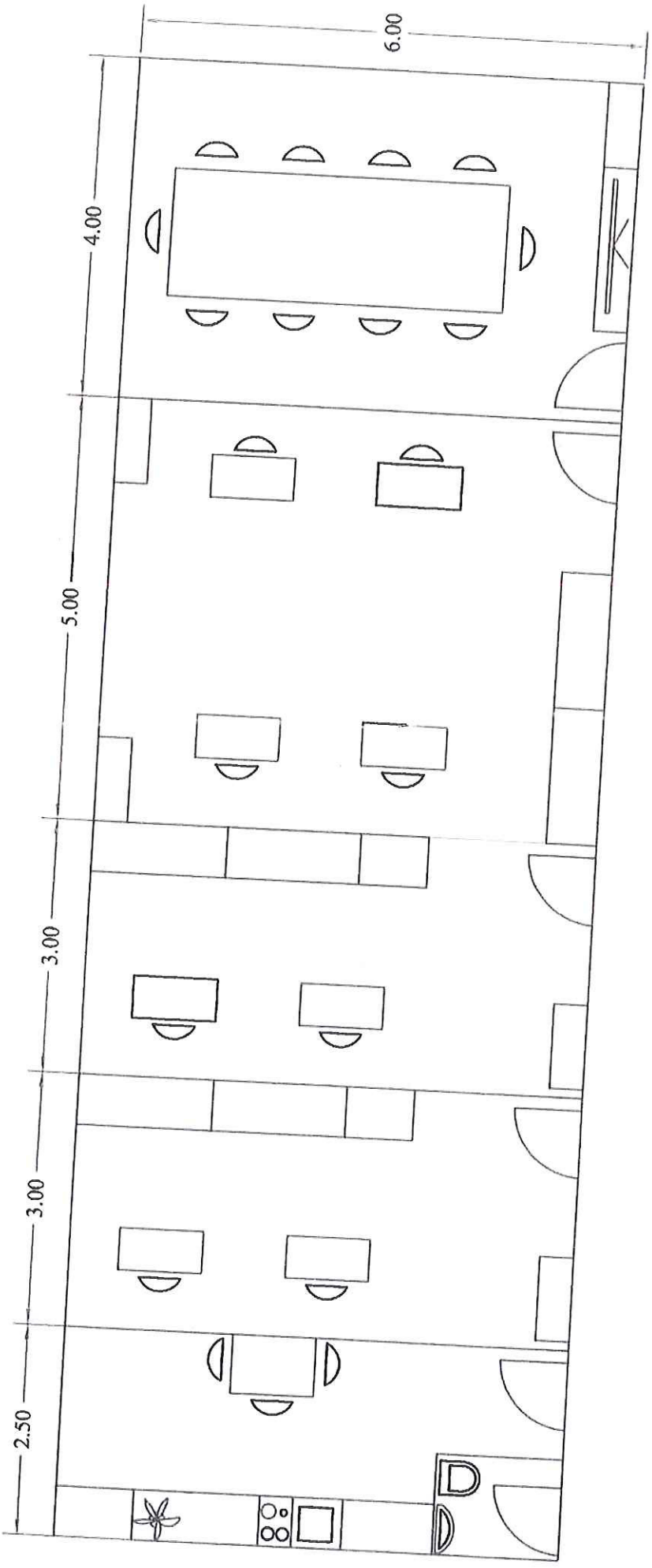

P.O.U. VODOVOD I KANALIZACIJA DANILOVGRAD

STRABAG
STRABAG AG

iii) CONTRACTOR'S EQUIPMENT

The Tenderer shall provide adequate information to demonstrate clearly that it has the capability to meet the requirements for the key equipment listed in Volume I, Attachment 2 (Preliminary Programme). A separate Form shall be prepared for each item of equipment listed, or for alternative equipment proposed by the Tenderer. The Tenderer shall provide all the information requested below, to the extent possible. Fields with asterisk (*) shall be used for evaluation.

In case of a JVCA the form shall be submitted for each partner of the JVCA.

Type of Equipment*		
Equipment Information	Name of manufacturer	Model and power rating
	Capacity*	Year of manufacture*
Current Status	Current location	
	Details of current commitments	
Source	Indicate source of the equipment ☐ Owned ☐ Rented ☐ Leased ☐ Specially manufactured	

The following information shall be provided only for equipment not owned by the Tenderer.

Owner	Name of owner	
	Address of owner	
	Telephone	Contact name and title
	Fax	Telex
Agreements	Details of rental / lease / manufacture agreements specific to the project	

CONTRACTOR'S EQUIPMENT

The Tenderer shall provide adequate information to demonstrate clearly that it has the capability to meet the requirements for the key equipment listed in Volume I, Attachment 2 (Preliminary Programme). A separate Form shall be prepared for each item of equipment listed, or for alternative equipment proposed by the Tenderer. The Tenderer shall provide all the information requested below, to the extent possible. Fields with asterisk (*) shall be used for evaluation.

In case of a JVCA the form shall be submitted for each partner of the JVCA.

Type of Equipment* EXCAVATOR		
Equipment Information	Name of manufacturer LIEBHERR	Model and power rating R 924C /121 kW
	Capacity* 26,5 t	Year of manufacture* 2007
Current Status	Current location Austria	
	Details of current commitments Available (011 3140 022)	
Source	Indicate source of the equipment ☒ Owned ☐ Rented ☐ Leased ☐ Specially manufactured	

The following information shall be provided only for equipment not owned by the Tenderer.

Owner	Name of owner	
	Address of owner	
	Telephone	Contact name and title
	Fax	Telex
Agreements	Details of rental / lease / manufacture agreements specific to the project	

STRABAG
STRABAG AG

CONTRACTOR'S EQUIPMENT

The Tenderer shall provide adequate information to demonstrate clearly that it has the capability to meet the requirements for the key equipment listed in Volume I, Attachment 2 (Preliminary Programme). A separate Form shall be prepared for each item of equipment listed, or for alternative equipment proposed by the Tenderer. The Tenderer shall provide all the information requested below, to the extent possible. Fields with asterisk (*) shall be used for evaluation.

In case of a JVCA the form shall be submitted for each partner of the JVCA.

Type of Equipment* EXCAVATOR		
Equipment Information	Name of manufacturer NEW HOLLAND	Model and power rating E235BSR NLC / 118,0 kW
	Capacity* 24,6 t	Year of manufacture* 2008
Current Status	Current location Austria	
	Details of current commitments Available (011 3140 020)	
Source	Indicate source of the equipment ☒ Owned ☐ Rented ☐ Leased ☐ Specially manufactured	

The following information shall be provided only for equipment not owned by the Tenderer.

Owner	Name of owner	
	Address of owner	
	Telephone	Contact name and title
	Fax	Telex
Agreements	Details of rental / lease / manufacture agreements specific to the project	

CONTRACTOR'S EQUIPMENT

The Tenderer shall provide adequate information to demonstrate clearly that it has the capability to meet the requirements for the key equipment listed in Volume I, Attachment 2 (Preliminary Programme). A separate Form shall be prepared for each item of equipment listed, or for alternative equipment proposed by the Tenderer. The Tenderer shall provide all the information requested below, to the extent possible. Fields with asterisk (*) shall be used for evaluation.

In case of a JVCA the form shall be submitted for each partner of the JVCA.

Type of Equipment* EXCAVATOR		
Equipment Information	Name of manufacturer LIEBHERR	Model and power rating R 924C LITRONIC /121 kW
	Capacity* 26,5 t	Year of manufacture* 2008
Current Status	Current location Austria	
	Details of current commitments Available (011 3140 065)	
Source	Indicate source of the equipment ☒ Owned ☐ Rented ☐ Leased ☐ Specially manufactured	

The following information shall be provided only for equipment not owned by the Tenderer.

Owner	Name of owner	
	Address of owner	
	Telephone	Contact name and title
	Fax	Telex
Agreements	Details of rental / lease / manufacture agreements specific to the project	

CONTRACTOR'S EQUIPMENT

The Tenderer shall provide adequate information to demonstrate clearly that it has the capability to meet the requirements for the key equipment listed in Volume I, Attachment 2 (Preliminary Programme). A separate Form shall be prepared for each item of equipment listed, or for alternative equipment proposed by the Tenderer. The Tenderer shall provide all the information requested below, to the extent possible. Fields with asterisk (*) shall be used for evaluation.

In case of a JVCA the form shall be submitted for each partner of the JVCA.

Type of Equipment* Transport vehicle		
Equipment Information	Name of manufacturer IVECO	Model and power rating TRAKKER AT380 T45 /332 kW
	Capacity* 16 t	Year of manufacture* 2013
Current Status	Current location Austria	
	Details of current commitments Available (011 P201 015)	
Source	Indicate source of the equipment ☒ Owned ☐ Rented ☐ Leased ☐ Specially manufactured	

The following information shall be provided only for equipment not owned by the Tenderer.

Owner	Name of owner	
	Address of owner	
	Telephone	Contact name and title
	Fax	Telex
Agreements	Details of rental / lease / manufacture agreements specific to the project	

CONTRACTOR'S EQUIPMENT

The Tenderer shall provide adequate information to demonstrate clearly that it has the capability to meet the requirements for the key equipment listed in Volume I, Attachment 2 (Preliminary Programme). A separate Form shall be prepared for each item of equipment listed, or for alternative equipment proposed by the Tenderer. The Tenderer shall provide all the information requested below, to the extent possible. Fields with asterisk (*) shall be used for evaluation.

In case of a JVCA the form shall be submitted for each partner of the JVCA.

Type of Equipment* Transport vehicle		
Equipment Information	Name of manufacturer KAISER	Model and power rating AQUASTAR III /350 kW
	Capacity* 16 t	Year of manufacture* 2014
Current Status	Current location Austria	
	Details of current commitments Available (011 P201 016)	
Source	Indicate source of the equipment ☒ Owned ☐ Rented ☐ Leased ☐ Specially manufactured	

The following information shall be provided only for equipment not owned by the Tenderer.

Owner	Name of owner	
	Address of owner	
	Telephone	Contact name and title
	Fax	Telex
Agreements	Details of rental / lease / manufacture agreements specific to the project	

CONTRACTOR'S EQUIPMENT

The Tenderer shall provide adequate information to demonstrate clearly that it has the capability to meet the requirements for the key equipment listed in Volume I, Attachment 2 (Preliminary Programme). A separate Form shall be prepared for each item of equipment listed, or for alternative equipment proposed by the Tenderer. The Tenderer shall provide all the information requested below, to the extent possible. Fields with asterisk (*) shall be used for evaluation.

In case of a JVCA the form shall be submitted for each partner of the JVCA.

Type of Equipment* Transport vehicle		
Equipment Information	Name of manufacturer MERCEDES	Model and power rating ACTROS 2541 LL /260 kW
	Capacity* 12 t	Year of manufacture* 2010
Current Status	Current location Austria	
	Details of current commitments Available (011 P201 018)	
Source	Indicate source of the equipment ☒ Owned ☐ Rented ☐ Leased ☐ Specially manufactured	

The following information shall be provided only for equipment not owned by the Tenderer.

Owner	Name of owner	
	Address of owner	
	Telephone	Contact name and title
	Fax	Telex
Agreements	Details of rental / lease / manufacture agreements specific to the project	

CONTRACTOR'S EQUIPMENT

The Tenderer shall provide adequate information to demonstrate clearly that it has the capability to meet the requirements for the key equipment listed in Volume I, Attachment 2 (Preliminary Programme). A separate Form shall be prepared for each item of equipment listed, or for alternative equipment proposed by the Tenderer. The Tenderer shall provide all the information requested below, to the extent possible. Fields with asterisk (*) shall be used for evaluation.

In case of a JVCA the form shall be submitted for each partner of the JVCA.

Type of Equipment* Transport vehicle		
Equipment Information	Name of manufacturer MERCEDES	Model and power rating MERCEDES 2543L 6X2 /315 kW
	Capacity* 12 t	Year of manufacture* 2011
Current Status	Current location Austria	
	Details of current commitments Available (011 0004 262)	
Source	Indicate source of the equipment ☒ Owned ☐ Rented ☐ Leased ☐ Specially manufactured	

The following information shall be provided only for equipment not owned by the Tenderer.

Owner	Name of owner	
	Address of owner	
	Telephone	Contact name and title
	Fax	Telex
Agreements	Details of rental / lease / manufacture agreements specific to the project	

CONTRACTOR'S EQUIPMENT

The Tenderer shall provide adequate information to demonstrate clearly that it has the capability to meet the requirements for the key equipment listed in Volume I, Attachment 2 (Preliminary Programme). A separate Form shall be prepared for each item of equipment listed, or for alternative equipment proposed by the Tenderer. The Tenderer shall provide all the information requested below, to the extent possible. Fields with asterisk (*) shall be used for evaluation.

In case of a JVCA the form shall be submitted for each partner of the JVCA.

Type of Equipment* Transport vehicle		
Equipment Information	Name of manufacturer KAISER	Model and power rating AUQASTAR III /324 kW
	Capacity* 16 t	Year of manufacture* 2016
Current Status	Current location Austria	
	Details of current commitments Available (011 0005 887)	
Source	Indicate source of the equipment ☒ Owned ☐ Rented ☐ Leased ☐ Specially manufactured	

The following information shall be provided only for equipment not owned by the Tenderer.

Owner	Name of owner	
	Address of owner	
	Telephone	Contact name and title
	Fax	Telex
Agreements	Details of rental / lease / manufacture agreements specific to the project	

CONTRACTOR'S EQUIPMENT

The Tenderer shall provide adequate information to demonstrate clearly that it has the capability to meet the requirements for the key equipment listed in Volume I, Attachment 2 (Preliminary Programme). A separate Form shall be prepared for each item of equipment listed, or for alternative equipment proposed by the Tenderer. The Tenderer shall provide all the information requested below, to the extent possible. Fields with asterisk (*) shall be used for evaluation.

In case of a JVCA the form shall be submitted for each partner of the JVCA.

Type of Equipment* Vibratory plate		
Equipment Information	Name of manufacturer BOMAG	Model and power rating BVP 10/36 /3 kW
	Capacity* 83 kg	Year of manufacture* 2010
Current Status	Current location Austria	
	Details of current commitments Available (011 D800 006)	
Source	Indicate source of the equipment ☒ Owned ☐ Rented ☐ Leased ☐ Specially manufactured	

The following information shall be provided only for equipment not owned by the Tenderer.

Owner	Name of owner	
	Address of owner	
	Telephone	Contact name and title
	Fax	Telex
Agreements	Details of rental / lease / manufacture agreements specific to the project	

CONTRACTOR'S EQUIPMENT

The Tenderer shall provide adequate information to demonstrate clearly that it has the capability to meet the requirements for the key equipment listed in Volume I, Attachment 2 (Preliminary Programme). A separate Form shall be prepared for each item of equipment listed, or for alternative equipment proposed by the Tenderer. The Tenderer shall provide all the information requested below, to the extent possible. Fields with asterisk (*) shall be used for evaluation.

In case of a JVCA the form shall be submitted for each partner of the JVCA.

Type of Equipment* Vibratory plate		
Equipment Information	Name of manufacturer BOMAG	Model and power rating BVP 10/36 /3 kW
	Capacity* 83 kg	Year of manufacture* 2009
Current Status	Current location Austria	
	Details of current commitments Available (011 D861 003)	
Source	Indicate source of the equipment ☒ Owned ☐ Rented ☐ Leased ☐ Specially manufactured	

The following information shall be provided only for equipment not owned by the Tenderer.

Owner	Name of owner	
	Address of owner	
	Telephone	Contact name and title
	Fax	Telex
Agreements	Details of rental / lease / manufacture agreements specific to the project	

VHS Brno, a.s.

337

STRABAG

CONTRACTOR'S EQUIPMENT

The Tenderer shall provide adequate information to demonstrate clearly that it has the capability to meet the requirements for the key equipment listed in Volume I, Attachment 2 (Preliminary Programme). A separate Form shall be prepared for each item of equipment listed, or for alternative equipment proposed by the Tenderer. The Tenderer shall provide all the information requested below, to the extent possible. Fields with asterisk (*) shall be used for evaluation.

In case of a JVCA the form shall be submitted for each partner of the JVCA.

Type of Equipment* Vibratory plate		
Equipment Information	Name of manufacturer BOMAG	Model and power rating BPR 45/55D /6,4 kW
	Capacity* 396 kg	Year of manufacture* 2010
Current Status	Current location Austria	
	Details of current commitments Available (011 D861 013)	
Source	Indicate source of the equipment ☒ Owned ☐ Rented ☐ Leased ☐ Specially manufactured	

The following information shall be provided only for equipment not owned by the Tenderer.

Owner	Name of owner	
	Address of owner	
	Telephone	Contact name and title
	Fax	Telex
Agreements	Details of rental / lease / manufacture agreements specific to the project	

CONTRACTOR'S EQUIPMENT

The Tenderer shall provide adequate information to demonstrate clearly that it has the capability to meet the requirements for the key equipment listed in Volume I, Attachment 2 (Preliminary Programme). A separate Form shall be prepared for each item of equipment listed, or for alternative equipment proposed by the Tenderer. The Tenderer shall provide all the information requested below, to the extent possible. Fields with asterisk (*) shall be used for evaluation.

In case of a JVCA the form shall be submitted for each partner of the JVCA.

Type of Equipment* Vibratory plate		
Equipment Information	Name of manufacturer WACKER NEUSON	Model and power rating DPU 2540H /3,1 kW
	Capacity* 154 kg	Year of manufacture* 2010
Current Status	Current location Austria	
	Details of current commitments Available (011 D861 029)	
Source	Indicate source of the equipment ☒ Owned ☐ Rented ☐ Leased ☐ Specially manufactured	

The following information shall be provided only for equipment not owned by the Tenderer.

Owner	Name of owner	
	Address of owner	
	Telephone	Contact name and title
	Fax	Telex
Agreements	Details of rental / lease / manufacture agreements specific to the project	

CONTRACTOR'S EQUIPMENT

The Tenderer shall provide adequate information to demonstrate clearly that it has the capability to meet the requirements for the key equipment listed in Volume I, Attachment 2 (Preliminary Programme). A separate Form shall be prepared for each item of equipment listed, or for alternative equipment proposed by the Tenderer. The Tenderer shall provide all the information requested below, to the extent possible. Fields with asterisk (*) shall be used for evaluation.

In case of a JVCA the form shall be submitted for each partner of the JVCA.

Type of Equipment* Vibratory plate		
Equipment Information	Name of manufacturer BOMAG	Model and power rating BVP 18/45 /3,6 kW
	Capacity* 91 kg	Year of manufacture* 2011
Current Status	Current location Austria	
	Details of current commitments Available (011 D861 066)	
Source	Indicate source of the equipment ☒ Owned ☐ Rented ☐ Leased ☐ Specially manufactured	

The following information shall be provided only for equipment not owned by the Tenderer.

Owner	Name of owner	
	Address of owner	
	Telephone	Contact name and title
	Fax	Telex
Agreements	Details of rental / lease / manufacture agreements specific to the project	

STRABAG
STRABAG AG

CONTRACTOR'S EQUIPMENT

The Tenderer shall provide adequate information to demonstrate clearly that it has the capability to meet the requirements for the key equipment listed in Volume I, Attachment 2 (Preliminary Programme). A separate Form shall be prepared for each item of equipment listed, or for alternative equipment proposed by the Tenderer. The Tenderer shall provide all the information requested below, to the extent possible. Fields with asterisk (*) shall be used for evaluation.

In case of a JVCA the form shall be submitted for each partner of the JVCA.

Type of Equipment* Equipment for trench sheeting		
Equipment Information	Name of manufacturer ALLROUND	Model and power rating n.a.
	Capacity* n.a.	Year of manufacture* 1992
Current Status	Current location A-Spittal/Drau, Austria	
	Details of current commitments No current commitments	
Source	Indicate source of the equipment x Owned ☐ Rented ☐ Leased ☐ Specially manufactured	

The following information shall be provided only for equipment not owned by the Tenderer.

Owner	Name of owner	
	Address of owner	
	Telephone	Contact name and title
	Fax	Telex
Agreements	Details of rental / lease / manufacture agreements specific to the project	

CONTRACTOR'S EQUIPMENT

The Tenderer shall provide adequate information to demonstrate clearly that it has the capability to meet the requirements for the key equipment listed in Volume I, Attachment 2 (Preliminary Programme). A separate Form shall be prepared for each item of equipment listed, or for alternative equipment proposed by the Tenderer. The Tenderer shall provide all the information requested below, to the extent possible. Fields with asterisk (*) shall be used for evaluation.

In case of a JVCA the form shall be submitted for each partner of the JVCA.

Type of Equipment* Equipment for trench sheeting		
Equipment Information	Name of manufacturer ALLROUND	Model and power rating n.a.
	Capacity* n.a.	Year of manufacture* 1990
Current Status	Current location A-Spittal/Drau, Austria	
	Details of current commitments No current commitments	
Source	Indicate source of the equipment x Owned ☐ Rented ☐ Leased ☐ Specially manufactured	

The following information shall be provided only for equipment not owned by the Tenderer.

Owner	Name of owner	
	Address of owner	
	Telephone	Contact name and title
	Fax	Telex
Agreements	Details of rental / lease / manufacture agreements specific to the project	

CONTRACTOR'S EQUIPMENT

The Tenderer shall provide adequate information to demonstrate clearly that it has the capability to meet the requirements for the key equipment listed in Section 1.3, Evaluation and Qualification Criteria. A separate Form shall be prepared for each item of equipment listed, or for alternative equipment proposed by the Tenderer. The Tenderer shall provide all the information requested below, to the extent possible. Fields with asterisk (*) shall be used for evaluation.

In case of a JVCA the form shall be submitted for each partner of the JVCA.

Type of Equipment* Equipment for trench sheeting		
Equipment Information	Name of manufacturer ALLROUND	Model and power rating n.a.
	Capacity* n.a.	Year of manufacture* 1994
Current Status	Current location A-Spittal/Drau, Austria	
	Details of current commitments No current commitments	
Source	Indicate source of the equipment x Owned ☐ Rented ☐ Leased ☐ Specially manufactured	

The following information shall be provided only for equipment not owned by the Tenderer.

Owner	Name of owner	
	Address of owner	
	Telephone	Contact name and title
	Fax	Telex
Agreements	Details of rental / lease / manufacture agreements specific to the project	

CONTRACTOR'S EQUIPMENT

The Tenderer shall provide adequate information to demonstrate clearly that it has the capability to meet the requirements for the key equipment listed in Volume I, Attachment 2 (Preliminary Programme). A separate Form shall be prepared for each item of equipment listed, or for alternative equipment proposed by the Tenderer. The Tenderer shall provide all the information requested below, to the extent possible. Fields with asterisk (*) shall be used for evaluation.

In case of a JVCA the form shall be submitted for each partner of the JVCA.

Type of Equipment* Equipment for trench sheeting		
Equipment Information	Name of manufacturer KRINGS	Model and power rating n.a.
	Capacity* n.a.	Year of manufacture* 1994
Current Status	Current location A-Spittal/Drau, Austria	
	Details of current commitments No current commitments	
Source	Indicate source of the equipment x Owned ☐ Rented ☐ Leased ☐ Specially manufactured	

The following information shall be provided only for equipment not owned by the Tenderer.

Owner	Name of owner	
	Address of owner	
	Telephone	Contact name and title
	Fax	Telex
Agreements	Details of rental / lease / manufacture agreements specific to the project	

iv) CONTRACTOR´S PERSONNEL

The Tenderer shall provide suitably qualified personnel to fill the following positions. For each position the Tenderer will supply information on a first-choice candidate and an alternate, each of whom should meet the experience requirements specified below.
Other requirements on Contractor´s staff are listed in **Tender Data, para. 3.2., Clause 3.2.5** and below.

Table 1 - Contractor´s Personnel

No.	Position	Total Work Similar Experience (years)	In Similar Works Experience (years)
1.	**Contractor's Representative** The proposed person shall be an employee of the Tenderer	10	5
2.	**Site Manager** The proposed Site Manager shall be employee of the Tenderer and shall bear with Montenegrin or any other Eligible country licences to perform engineering works	5	3
3.	**Land Surveyor** The proposed person shall bear with a Montenegrin or any other Eligible country licence to perform land surveying	5	3
4.	**Construction Engineer** The proposed Designer shall bear with a Montenegrin or any other Eligible country licence in the subject of the Tender	5	3
5.	**Electrical Engineer** The proposed Designer shall bear with a Montenegrin or any other Eligible country licence in the subject of the Tender	5	3
6.	**Miner** The proposed person shall bear with a Montenegrin or any other Eligible country licence in the subject of the Tender	5	3
7.	**Designer of Water Supply / FS** The proposed Designer shall bear with a Montenegrin or any other Eligible country licence in the subject of the Tender	5	3

Proposed Personnel

Tenderers should provide the names of suitably qualified personnel to meet the specified requirements for each of the positions listed in Tender Data. The data on their experience should be supplied using the Form below for each candidate.

In case of a JVCA the form shall be submitted for each partner of the JVCA.

1.	**Contractor's Representative**
	Zlatan Djurdjic
2.	**Site Manager**
	Svetlana Milinski Predrag Lovic
3.	**Land Surveyor**
	Nikica Pust Bozidar Rsumovic
4.	**Construction Engineer**
	Marko Lekovic Goran Rakic
5.	**Electrical Engineer**
	Zoran Zivkovic Radomir Jovic
6.	**Miner**
	Ivan Rakocevic Aleksandar Vuceljic
etc.	**Designer of Water Supply / FS**
	Milan Ivetic

346

STRABAG
STRABAG AG

Resume of Proposed Personnel

The Tenderer shall provide all the information requested below for each of the personnel listed the schedule of the Contractor's Personnel. Fields with asterix (*) shall be used for evaluation.

In case of a JVCA the form shall be submitted for each partner of the JVCA.

Position* **Contractor's Representative**		
Personnel information	Name * Zlatan Djurdjic	Date of birth **11.10.1963**
	Professional qualifications *Graduated Civil Engineer* *Licence 415 5398 04; 315 8446 04, Macedonian Chamber of Architects and Engineers* *License A-for execution and design*	
Present employment	Name of Employer *STRABAG*	
	Address of Employer Antifasisticke borbe 13 a, 11070Belgrade, Serbia	
	Telephone +381 011/222 17 00	Contact (manager / personnel officer)
	Fax +381 011/222 18 40	E-mail
	Job title Project Manager	Years with present Employer *01/2012-present*

Summarize professional experience in reverse chronological order. Indicate particular technical and managerial experience relevant to the project.

From*	To*	Company, Project, Position and Relevant Experience*
01/2017-	*present*	*STRABAG* / Extension and upgrading the Customs clearance and inspection facilities of the road Border Crossing Tabanovce; Extension of the existing cargo customs terminal along with new access road, new customs clearance building with support services, inspection facilities for trucks and a warehouse, external electrical works, water supply, fire fighting, stormwater and sewage netwotk with WWTP, horizontal and vertical traffic signalization and fence off the terminal and construction of two new lanes of trucks on exit side; Value 1,7 mil. EUR; (FIDIC) */Project Manager*
01/2017-	*present*	*STRABAG* / Construction of Tailings spill facility no.4 in Mine Sasa, M.Kamenica; Tunnel, gallery and tunnel clear water, contact injection, gallery extension of tunnel, fast flow, waterfall, berm, channel, pre dam, drainage system, pulp line, return technical water piping; Value 4,95 mil. EUR;*/Project Manager*

STRABAG

02/2016	*12/2016*	*STRABAG* / Rehabilitation of the motorway section Kumanovo–Miladinovci, as part of Corridor X; Scraping and roughening of existing asphalt pavement, placing geotextile and geogrid; works on pavement, repairing of structures; Length: 23,67 km; Value 5,11 mil. EUR; (FIDIC) */Project Manager*
12/2015	*11/2016*	*STRABAG* / Reconstruction on regional road P2335, section Krivogastani – Obrsani - Vogani, Rahabilitation on regional road P2335, section Lazani – Ropotovo and regional road P2336, section Ropotovo - Crniliste, (three sections); Scraping and roughening of existing asphalt pavement, works on pavement, Value 3 million EUR; (FIDIC) */Project Manager*
10/2015	*12/2015*	*STRABAG* / Rehabilitation on regional road P2340 (connection with P1101-Novaci) length 21km; Scraping and roughening of existing asphalt pavement, works on pavement, Value 1.139 mil. EUR; (FIDIC)*/Project Manager*
07/2014	*12/2015*	*STRABAG* / Rehabilitation of the motorway section Veles–Katlanovo, as part of Corridor X; Scraping and roughening of existing asphalt pavement, works on roads base on embankment - making of gravel piles d80cm, placing geotextile and geogrid; works on pavement - subgrade, subbase, drainage chanels, asphalt; Length: 23,5 km; Value 6.4 million EUR; (FIDIC)*/Project Manager*
07/2014	*10/2015*	*STRABAG* /Reconstruction and Rehabilitation of the road section Veles–Kadrifakovo, Phase 2: End of third line-Veles landfill-Lozovo; Scraping and roughening of existing asphalt pavement, extension of existing culverts, works on pavement - embankment excavation, subgrade, drainage channels, asphalt; Length: 8,94 km; Value 5,738 million EUR; (FIDIC)*/Project Manager*
09/2013	*06/2014*	*STRABAG* /Reconstruction and Rehabilitation of the road section Veles–Kadrifakovo, Phase 1: Interchange Veles-end of third line-Veles landfill-Lozovo, Saramzalino; Scraping and roughening of existing asphalt pavement, extension of existing culverts, works on pavement - embankment excavation, subgrade, drainage chanels, asphalt; Length: 6,28 km / Value 1,1mil.EUR (FIDIC)*/Project Manager*
01/2012	*08/2013*	*STRABAG* /Reconstruction and rehabilitation of streets in Pancevo including upgrading of existing infrastructure, Reconstruction of taxiways A and B in Nikola Tesla Airport, Belgrade / Value 1 mil.EUR; */Project Manager*
04/2010	*01/2012*	*K-Dorstroy JSC/* Almaty – Kordai – Blagoveshenka – Merke – Tashkent - Termez road section reconstruction for category I-B (from km 536+000 to km 593+000), cement concrete pavement on 44 km, asphalt concrete pavement on 14 km, rain sewage system along the road 33 km, Republic of Kazakhstan / Value 125 million EUR; (FIDIC) */Project Manager*
03/2007	*04/2010*	*Izoteks doo/* Reconstruction of main road Loznica – Valjevo, Removing old pavement and placement of new in lenght 4 km, including landslide sanations, with upgrading of existing infrastructure / Value 0,5 million EUR; (FIDIC) *Executive Manager*
03/2007	*04/2010*	*Izoteks doo/* Pavement rehabilitation on town traffic routes; Rehabilitation of asphalt concrete pavement at the streets in Belgrade, including upgrading of existing infrastructure / Value 1 mil.EUR;*/ Executive Manager*
01/2006	*03/2007*	*GP Planum* /Reconstruction of runway at International Airport Sheremetyevo, Moscow, Russia Reconstruction of Sector 2 of Sheremetyevo airport; construction of concrete pavement, approx.75.000 m3 of concrete has been placed, with upgrading of existing infrastructure /Value:16 mil.USD/ *Project Manager*

348

STRABAG
STRABAG AG

01/2004	*12/2005*	*GP Planum/* Constr. site "Belgrade" Construction of Belgrade facilities, Construction and reconstruction of traffic routes in Belgrade Execution of works on Belgrade streets rehabilitation, execution of works on construction of traffic artery 2a-2a with the belonging infrastructure, drainages, sewage systems / Value: 1,5 mill Eur Execution of works in Stara Pazova: Construction of sewerage system with outgoes total length of 27km / Value: 3,2 mill E Construction of Regional Main Drain total length of 4,760.00m / Value: 0,7 mill Eur Execution of works on construction of the traffic artery and the belonging infrastructure, stormwater and sewage netwotk, in residential area Kamendin/ Value:1 mil. EUR Reconstruction of asphalt concrete pavement, including upgrading of existing infrastructure on runway and taxiway at Batajnica Airport, Belgrade/ Value:2,5 mil. EUR */Project Manager*
01/2000	*12/2000*	*GP Planum/* Reconstruction of runway at Perm Airport, cement concrete pavement, including upgrading of existing infrastructure, Russia/Value 10 million USD */Project Manager*
06/1998	*12/1998*	*GP Planum/* Construction of (E75) Highway Belgrade-Niš, Belgrade by-pass, Section I (5km), asphalt concrete pavement, with the belonging infrastructure, drainage systems, Belgrade/Value 4 mil. EUR/ */Project Manager*
12/1997	*06/1998*	*GP Planum/* Construction of Belgrade facilities: Construction and reconstruction of traffic routes with stormwater and sewage netwotk in Belgrade/Value 3mil.Eur Construction of Pumping Station "Tašmajdan" / Big water tank fi 6m, 40m deep including pumping station/ Value 2 mil. EUR */Project Manager*
04/1996	*04/1996*	*GP Planum/* Reconstruction of runway and taxiway at Chita Airport, Russia / Value 10 million USD/ *Deputy Project Manager*
04/1995	*12/1995*	*GP Planum/* Reconstruction of runway at Bratsk Airport, Russia/Value 15 million USD/ *Deputy Project Manager*
10/1993	*03/1994*	*GP Planum/* Construction of (E 75)Highway, Belgrade-Niš, Belgrade by-pass from the Bridge on the Sava to Ibar mainroad, Section IV (7km), asphalt concrete pavement, with the belonging infrastructure, drainage systems /Value:2.5 million EUR / *Deputy Project Manager*
04/1995	*12/1995*	*GP Planum/* Reconstruction of runway at Bratsk Airport, Russia/Value 15 million USD / *Deputy Project Manager*
10/1993	*03/1994*	*GP Planum/* Construction of (E 75)Highway, Belgrade-Niš, Belgrade by-pass from the Bridge on the Sava to Ibar mainroad, Section IV (7km), asphalt concrete pavement, with the belonging infrastructure, drainage systems /Value:2.5 million EUR/ *Deputy Project Manager*
11/1992	*09/1993*	*GP Planum/* Independent construction site "Belgrade" Construction of Belgrade facilities/ *Site engineer /*
10/1991	*10/1992*	*GP Planum/* Independent construction site "Beograd" Construction of Belgrade facilities/ *Junior engineer*
04/2001	*09/2003*	*Angoplanum LDA /* Construction and reconstruction of traffic routes in Luanda, Angola Rehabilitation of city streets and construction of new in Luanda including all belonging infrastructure, stormwater and sewage netwotks/Value 2 mil.USD/ *General Manager*

СОЦИЈАЛИСТИЧКА ФЕДЕРАТИВНА РЕПУБЛИКА ЈУГОСЛАВИЈА

РЕПУБЛИКА СРБИЈА

УНИВЕРЗИТЕТ У БЕОГРАДУ

ДИПЛОМА

О ВИСОКОЈ ШКОЛСКОЈ СПРЕМИ
СТЕЧЕНОЈ НА ГРАЂЕВИНСКОМ ФАКУЛТЕТУ

РЕКТОР УНИВЕРЗИТЕТА У БЕОГРАДУ И ДЕКАН ГРАЂЕВИНСКОГ ФАКУЛТЕТА СВОЈИМ ПОТПИСИМА И ПЕЧАТОМ ГРАЂЕВИНСКОГ ФАКУЛТЕТА ПОТВРЂУЈУ ДА ЈЕ

ЗЛАТАН Б. ЂУРЂИЋ

РОЂЕН-А 11.10.1963. ГОД. У БИХАЋУ РЕПУБЛИКА БОСНА И ХЕРЦЕГОВИНА УПИСАН ШКОЛСКЕ ГОДИНЕ 1982/83 НА ГРАЂЕВИНСКИ ФАКУЛТЕТ У БЕОГРАДУ, ПОЛОЖИО-ЛА СВЕ ПРОПИСАНЕ ИСПИТЕ ЗА СТИЦАЊЕ ПРАВА НА ОВУ ДИПЛОМУ СА СРЕДЊОМ ОЦЕНОМ 7.06 (СЕДАМ И 06/100) НА ДАН 26.04.1991. ПОЛОЖИО-ЛА ЈЕ ДИПЛОМСКИ ИСПИТ СА ОЦЕНОМ 9 (ДЕВЕТ), НА ОДСЕКУ ЗА ПУТЕВЕ И ЖЕЛЕЗНИЦЕ ГРАЂЕВИНСКОГ ФАКУЛТЕТАУ БЕОГРАДУ.

НА ОСНОВУ ТОГА, ИЗДАЈЕ МУ-ЈОЈ СЕ ОВА ДИПЛОМА, КОЈОМ СТИЧЕ ВИСОКУ ШКОЛСКУ СПРЕМУ И СТРУЧНО ЗВАЊЕ ДИПЛОМИРАНОГ ГРАЂЕВИНСКОГ ИНЖЕЊЕРА ЗА ПУТЕВЕ И ЖЕЛЕЗНИЦЕ КАО И СВА ПРАВА КОЈА МУ-ЈОЈ ПО ЗАКОНУ ПРИПАДАЈУ.

У Београду 20.05.1991. год. _____ бр. 57/13

ДЕКАН,

ПРО РЕКТОР,

D.O.O. VODOVOD I KANALIZACIJA VIK DANILOVGRAD

350

STRABAG
STRABAG AG

CERTIFIED TRANSLATION FROM SERBIAN INTO ENGLISH

SOCIALIST FEDERAL REPUBLIC OF YUGOSLAVIA

REPUBLIC OF SERBIA

UNIVERSITY OF BELGRADE

DIPLOMA

of the degree of Graduate Engineer of Civil Engineering[1] conferred by the Faculty of Civil Engineering

The Rector of the University of Belgrade and the Dean of the Faculty of Civil Engineering hereby certify with their signatures and the seal of the Faculty of Civil Engineering that

Zlatan B.[2] Djurdjić

born on **11 October 1963,** *in* **Bihać,** *Republic of Bosnia and Herzegovina, began his coursework at the University of Belgrade, Faculty of Civil Engineering, Department of* **Highway and Railway Engineering,** *in the academic year* **1982-1983** *and graduated on* **26 April 1991,** *having passed, with an average mark of* **7.06[3] (seven point oh six),** *all the examinations required for the degree of Graduate Engineer of Civil Engineering and having passed the final examination with an the mark* **9 (nine).**

---

[1] Granted upon completion of five-year undergraduate course of study at Faculty of Civil Engineering
[2] Father's forename initial
[3] The highest mark is 10 (ten) and the lowest passing mark is 6 (six)

Marija Vodoplav
Sworn Court Translator and Interpreter for the English Language
Belgrade
22 Vojvode Milanka St., Belgrade, Serbia
Tel. (011) 361-69-56
e-mail: vodoplav@sezampro.rs
appointed by the Ministry of Justice of the Republic of Serbia
- decision no.. 740-06-00223/95-18
My commission is permanent

СУДСКИ ПРЕВОДИЛАЦ ЗА ЕНГЛЕСКИ ЈЕЗИК • БЕОГРАД • МАРИЈА ВОДОПЛАВ

351

СУДСКИ ПРЕВОДИЛАЦ ЗА ЕНГЛЕСКИ ЈЕЗИК • БЕОГРАД • МАРИЈА ВОДОПЛАВ

STRABAG
STRABAG AG

diploma has been issued in confirmation of the **Degree of Graduate Engineer of Civil** neering and of the professional title of **Graduate Engineer of Civil Engineering** hway and Railway Engineering) with all the rights and privileges appertaining to that ree.

sued in Belgrade, this 20th day of May 1991.

Diploma number **57/13**

DEAN
(signature illegible)

VICE - RECTOR
(signature illegible)

(round seal)
Socialist Federal Republic of Yugoslavia
Republic of Serbia
University of Belgrade
Faculty of Civil Engineering

end of translation

I CERTIFY that this document has been correctly translated from Serbian into English.
In testimony thereof I affix hereunto my signature and seal of Office in Belgrade, Serbia on 3 October 2013.

СУДСКИ ПРЕВОДИЛАЦ ЗА ЕНГЛЕСКИ ЈЕЗИК • БЕОГРАД • МАРИЈА ВОДОПЛАВ

Marija Vodoplav
Sworn Court Translator and Interpreter
for the English language Belgrade

Translation certification number: 11[illegible]/2013
Belgrade, 3 October2013

Marija Vodoplav
Sworn Court Translator and Interpreter for the English Language
Belgrade
22 Vojvode Milenka St., Belgrade, Serbia
Tel. (011) 361-69-56
e-mail: vodoplav@sezampro.rs
appointed by the Ministry of Justice of the Republic of Serbia
- decision no.. 740-06-00223/95-18
My commission is permanent

STRABAG
STRABAG AG

СОЦИЈАЛИСТИЧКА ФЕДЕРАТИВНА РЕПУБЛИКА ЈУГОСЛАВИЈА

РЕПУБЛИКА СРБИЈА

УНИВЕРЗИТЕТ У БЕОГРАДУ

ДИПЛОМА

О ВИСОКОЈ ШКОЛСКОЈ СПРЕМИ
СТЕЧЕНОЈ НА ГРАЂЕВИНСКОМ ФАКУЛТЕТУ

РЕКТОР УНИВЕРЗИТЕТА У БЕОГРАДУ И ДЕКАН ГРАЂЕВИНСКОГ ФАКУЛТЕТА СВОЈИМ ПОТПИСИМА И ПЕЧАТОМ ГРАЂЕВИНСКОГ ФАКУЛТЕТА ПОТВРЂУЈУ ДА ЈЕ

ЗЛАТАН Б. КУРБИБ

РОЂЕН-А 11.10.1963. ГОД. У Б И Х А Ћ У РЕПУБЛИКА БОСНА И ХЕРЦЕГОВИНА УПИСАН ШКОЛСКЕ ГОДИНЕ 1982/83 НА ГРАЂЕВИНСКИ ФАКУЛТЕТ У БЕОГРАДУ, ПОЛОЖИО-ЛА СВЕ ПРОПИСАНЕ ИСПИТЕ ЗА СТИЦАЊЕ ПРАВА НА ОВУ ДИПЛОМУ СА СРЕДЊОМ ОЦЕНОМ 7,06 (С Е Д А М И 06/100) 9 (Д Е В Е Т), ПОЛОЖИО-ЛА ЈЕ ДИПЛОМСКИ ИСПИТ СА ОЦЕНОМ НА ДАН 26.04.1991. НА ОДСЕКУ ЗА ПУТЕВЕ И ЖЕЛЕЗНИЦЕ ГРАЂЕВИНСКОГ ФАКУЛТЕТАУ БЕОГРАДУ.

НА ОСНОВУ ТОГА, ИЗДАЈЕ МУ-ЈОЈ СЕ ОВА ДИПЛОМА, КОЈОМ СТИЧЕ ВИСОКУ ШКОЛСКУ СПРЕМУ И СТРУЧНО ЗВАЊЕ ДИПЛОМИРАНОГ ГРАЂЕВИНСКОГ ИНЖЕЊЕРА ЗА ПУТЕВЕ И ЖЕЛЕЗНИЦЕ КАО И СВА ПРАВА КОЈА МУ-ЈОЈ ПО ЗАКОНУ ПРИПАДАЈУ.

У Београду 20.05.1991. год. _____ бр. 57/13

ДЕКАН,

ПРО РЕКТОР,

353

STRABAG
STRABAG AG

Resume of Proposed Personnel

The Tenderer shall provide all the information requested below for each of the personnel listed the schedule of the Contractor's Personnel. Fields with asterix (*) shall be used for evaluation.

In case of a JVCA the form shall be submitted for each partner of the JVCA.

Position* **Site Manager**		
Personnel information	Name * **Svetlana Milinski**	Date of birth **06.03.1961.**
	Professional qualifications **licences 410 F5708 11, 314 A958 05, 414 8102 05;**	
Present employment	Name of Employer STRABAG	
	Address of Employer **Antifašističke borbe 13a, 11070 Belgrade, Serbia**	
	Telephone **+381(011)/222 17 00**	Contact (manager / personnel officer) **Guenther Hartweger**
	Fax **+381(011)/222 18 40**	E-mail **svetlana.milinski@strabag.com**
	Job title **Group Manager**	Years with present Employer **6 years**

Summarize professional experience in reverse chronological order. Indicate particular technical and managerial experience relevant to the project.

From*	To*	Company, Project, Position and Relevant Experience*
04/2011	present	STRABAG, Group Manager
01/2016	05/2017	STRABAG Construction of the complex of frontal toll station on the state road of I-A order No.1 (E-75 highway) at km 605 + 635 and base for the maintenance of roads in the municipality of Grocka k.o. Vrčin, Belgrade city /Project Manager Regulation of the Nisava river through the village from km 11+340 to km 12+945 with provision of flow capacity for high water on the upstream section from km 12+945 to km 13+248 and the downstream section from km 10+440 to km 11+340 / Contract Manager
09/2014	07/2015	LOT 4 Rehabilitation of E-75 Motorway from Mali Požarevac to Ralja (right carriageway), km. 615+598.00 – km. 641+479.00; / Project Manager

STRABAG
STRABAG AG

04/2014	12/2014	LOT B5.3 : Construction of the "Orlovača" interchange (phase II) / Project Manager
11/2013	08/2015	Protection of open cut mining Tamnava – Zapadno polje from flood water from Kladnica river basin including Duboki stream water – phase II / / Responsible contractor
10/2013	05/2014	Construction of Vojvodjanska Street with belonging infrastructure in Belgrade / Project Manager
09/2011	01/2013	LOT XXI – Improving of main road M-19, section node 02 0112 Debrc – Mišar / Project Manager
10/2010	11/2013	LOT A2: Lot A2 Design and construction of motorway alignment from km 188+680.00 to km 194+782.94 and design and construction of "Dobanovci" interchange (phase II); Length of the motorway: 7,3 km / Responsible contractor for hydrant network
12/2011	06/2012	STRABAG, Construction of S5 street with belonging infrastructure (sewerage system, rainwater sewage, water supply, pumping station and heating system) in Obrenovac / Project Manager
04/2011	09/2012	Protection of the Sava River littoral area "Mačva" – Reconstruction of the Sava River right-bank embankment from km 8+560 to km 18+029 / Responsible contractor
2008	2011	JKP Beograd put /Technical Manager Works on town infrastructure and reconstruction of streets
2005	2008	AD „Putevi" Užice / Assistant Project Manager for: – LOT 6 Ovčar Banja, reconstruction of traffic route M5, construction of tunnel l=436m and bridges over Zapadna Morava – Construction of tunnel Mačkovo Brdo (pretunnel tube, securing and protection of slopes on entrance and exit of the tunnel) – Reconstruction of Šargan tunnel l=767m on magistral road M5 (reprofiling of the tunnel, insulation works, stabilization of rock masses by anchoring and grouting) / Responsible contractor - Hydrotechnical works in the zone of bridges on Lot 2-2 "Borova glava-Uvac" – Construction works on Uzice by-pass – Construction and reconstruction of several local roads – Rehabilitation of several earth slides on regional and main roads – Construction of regional dumpside „Duboko" in Užice
1997	2005	JP Direkcija za izgradnju Opštine Požega / Director – Project leader for City water supply infrastructure projects – Project leader for City sewage infrastructure projects – Project leader for City sewage infrastructure projects /rain water drainage – Investment works on construction and reconstruction of city streets, local roads longer than 50 km

255

STRABAG
STRABAG AG

ДУПЛИКАТ 1

ИНЖЕЊЕРСКА КОМОРА СРБИЈЕ

ЛИЦЕНЦА

ОДГОВОРНОГ ИЗВОЂАЧА РАДОВА

На основу Закона о планирању и изградњи и
Статута Инжењерске коморе Србије

УПРАВНИ ОДБОР ИНЖЕЊЕРСКЕ КОМОРЕ СРБИЈЕ
утврђује да је

Светлана М. Милински

дипломирани грађевински инжењер
ЈМБ 0603961796837

одговорни извођач радова

хидротехничких објеката и инсталација водовода и канализације

Број лиценце
414 8102 05

У Београду,
27. јануара 2005. године

ПРЕДСЕДНИК КОМОРЕ
Проф. др Драгослав Шумарац
дипл. грађ. инж.

STRABAG
STRABAG AG

256

Coat of arms

DUPLICATE I

ENGINEERS CHAMBER OF SERBIA

LICENSE
OF A RESPONSIBLE CONTRACTOR

Pursuant to the Law on Planning and Construction and
Statute of the Engineers Chamber of Serbia

THE MANAGEMENT BOARD OF THE ENGINEERS CHAMBER OF SERBIA
establishes that

SVETLANA M. MILINSKI
a graduate civil engineer
Personal identification number: 0603961796837

is a responsible Contractor
for hydraulic structures and installations of water supply system and sewerage

License number:
414 8102 05

In Belgrade
January 27, 2005.

PRESIDENT OF THE CHAMBER
Prof.dr Dragoslav Sumarac
(signed)
graduate civil engineer

Stamp: Republic of Serbia, Engineers Chamber of Serbia

I, Samanta Tošković, Interpreter/translator for English language, appointed in Montenegro by the Decision of the Minister of Justice number: 03-745-1567/17-1 of 18 April 2017, for the period of five years ,certify this is the true translation of the original document.
Podgorica,12.09.2017.

357

STRABAG

Resume of Proposed Personnel

The Tenderer shall provide all the information requested below for each of the personnel listed the schedule of the Contractor's Personnel. Fields with asterix (*) shall be used for evaluation.

In case of a JVCA the form shall be submitted for each partner of the JVCA.

Position* **Site Manager**		
Personnel information	Name * **Predrag Lovic**	Date of birth **01. 07.1981**
	Professional qualifications *Graduated Civil Engineer* *Licence 07081069014, Macedonian Chamber of Architects and Engineers* *License A-for execution and design*	
Present employment	Name of Employer *STRABAG*	
	Address of Employer Antifasisticke borbe 13 a, 11070Belgrade, Serbia	
	Telephone +381 011/222 17 00	Contact (manager / personnel officer) Guenther Hartweger
	Fax +381 011/222 18 40	E-mail **predrag.lovic@strabag.com**
	Job title Project Manager	Years with present Employer *01/2012-present*

Summarize professional experience in reverse chronological order. Indicate particular technical and managerial experience relevant to the project.

From*	To*	Company, Project, Position and Relevant Experience*
01/2017-	*present*	*STRABAG* / Construction of Tailings spill facility no.4 in Mine Sasa, M.Kamenica; Tunnel, gallery and tunnel clear water, contact injection, gallery extension of tunnel, fast flow, waterfall, berm, channel, pre dam, drainage system, pulp line, return technical water piping; Value 4,95 mil. EUR;/ *Site engineer*
01/2016	12/2016	STRABAG / Rehabilitation of the motorway section Kumanovo–Miladinovci, as part of Corridor X; Scraping and roughening of existing asphalt pavement, placing geotextile and geogrid; works on pavement, repairing of structures; Length: 23,67 km; Value 5,11 mil. EUR; (FIDIC) / Site engineer

D.O.O. VODOVOD I KANALIZACIJA DANILOVGRAD

358

STRABAG
STRABAG AG

10/2015	*12/2015*	*STRABAG* /Rehabilitation on regional road P2340 (connection with P1101-Novaci) length 21km; Scraping and roughening of existing asphalt pavement, works on pavement, Value 1.139 mil. EUR; (FIDIC) / *Site engineer*
07/2014	*10/2015*	*STRABAG* / Rehabilitation of the motorway section Veles–Katlanovo, as part of Corridor X; Scraping and roughening of existing asphalt pavement, works on roads base on embankment - making of gravel piles d80cm, placing geotextile and geogrid; works on pavement - subgrade, subbase, drainage chanels, asphalt; Length: 23,5 km; Value 6.4 million EUR; (FIDIC) / *Site engineer*
09/2013	*06/2014*	*STRABAG* /Reconstruction and Rehabilitation of the road section Veles–Kadrifakovo, Phase 1: Interchange Veles-end of third line-Veles landfill-Lozovo, Saramzalino; Scraping and roughening of existing asphalt pavement, extension of existing culverts, works on pavement - embankment excavation, subgrade, drainage chanels, asphalt; Length: 6,28 km / Value 1,1mil.EUR (FIDIC) / *Site engineer*
04/2013	*08/2013*	*STRABAG* / Highway Tbilisi – Ponichala (Georgia); Highway E763 Belgrade – Požega, section Belgrade – Obrenovac (Serbia); Highway E761 Pojate – Preljina, section Adrani – Preljina (Serbia) / *Calculation department in Serbia*
07/2012	*04/2013*	*STRABAG* / Project of pavement rehabilitation – upgrading of main road M 5, section Paraćin – Straža, with upgrading of existing infrastructure, L=21,8 km (Serbia) / *Site engineer*
01/2012	*07/2012*	*STRABAG* / Reconstruction of urban streets, with upgrading of existing infrastructure, stormwater and sewage netwotks in Belgrade, municipality Obrenovac (Serbia) / *Site engineer*
02/2012	*01/2012*	*STRABAG* / Project of pavement rehabilitation – upgrading of regional road R101, section Obrenovac – Ub, L=24,2 km, with upgrading of existing infrastructure (Serbia) / *Site engineer*
04/2010	*02/2011*	*'Ratko Mitrović niskogradnja'' Beograd / Reconstruction* of urban streets with upgrading of existing infrastructure, stormwater and sewage netwotks in Belgrade, municipality Surčin (Serbia) / *Site manager*
03/2010	*11/2011*	*'Ratko Mitrović niskogradnja'' Beograd* / Project of pavement rehabilitation Highway E75 through Belgrade, section Surčin – toll plaza Bubanj Potok, with upgrading of existing infrastructure (Serbia) L=30 km / Site engineer

ИНЖЕЊЕРСКА КОМОРА СРБИЈЕ

ЛИЦЕНЦА

ОДГОВОРНОГ ИЗВОЂАЧА РАДОВА

На основу Закона о планирању и изградњи и
Статута Инжењерске коморе Србије

УПРАВНИ ОДБОР ИНЖЕЊЕРСКЕ КОМОРЕ СРВИЈЕ
утврђује да је

Предраг Р. Ловић

дипломирани грађевински инжењер
ЛИБ 07081069014

одговорни извођач радова
грађевинских конструкција и грађевинско-занатских радова на објектима нискоградње

Број лиценце
412 H687 13

У Београду,
4. јула 2013. године

ПРЕДСЕДНИК КОМОРЕ
Милован Главоњић
дипл. инж. ел.

360

STRABAG
STRABAG AG

Coat of arms

ENGINEERS CHAMBER OF SERBIA

LICENSE
OF A RESPONSIBLE CONTRACTOR

Pursuant to the Law on Planning and Construction and
Statute of the Engineers Chamber of Serbia

THE MANAGEMENT BOARD OF THE ENGINEERS CHAMBER OF SERBIA
establishes that

PREDRAG R. LOVIC
a graduate civil engineer
Personal identification number: 07081069014

is a responsible Contractor
for civil constructions and craftwork construction works on civil engineering structures

License number:
412 H687 13

In Belgrade
July 4, 2013.

PRESIDENT OF THE CHAMBER
Milovan Glavonjic
(signed)
graduate electrical engineer

Stamp: Republic of Serbia, Engineers Chamber of Serbia

I, Samanta Tošković, Interpreter/translator for English language, appointed in Montenegro by the Decision of the Minister of Justice number: 03-745-1567/17-1 of 18 April 2017, for the period of five years ,certify this is the true translation of the original document. Podgorica,12.09.2017.

D.O.O. "VODOVOD I KANALIZACIJA" VIK VIŠEGRAD

361

STRABAG

Resume of Proposed Personnel

The Tenderer shall provide all the information requested below for each of the personnel listed the schedule of the Contractor's Personnel. Fields with asterix (*) shall be used for evaluation.

In case of a JVCA the form shall be submitted for each partner of the JVCA.

Position* **Land Surveyor**		
Personnel information	Name * **Nikica Pust**	Date of birth **10.10.1977**
	Professional qualifications *Graduated Engineer of Geodesy* *Licence 471 G978 12*	
Present employment	Name of Employer *STRABAG*	
	Address of Employer Antifasisticke borbe 13 a, 11070Belgrade, Serbia	
	Telephone +381 011/222 17 00	Contact (manager / personnel officer) Guenther Hartweger
	Fax +381 011/222 18 40	E-mail nikica.pust@strabag.com
	Job title Site Surveyor	Years with present Employer 05/2014-present

Summarize professional experience in reverse chronological order. Indicate particular technical and managerial experience relevant to the project.

From*	To*	Company, Project, Position and Relevant Experience*
01/2017-	*present*	*STRABAG/* Construction of Tailings spill facility no.4 in Mine Sasa, M.Kamenica; Tunnel, gallery and tunnel clear water, contact injection, gallery extension of tunnel, fast flow, waterfall, berm, channel, pre dam, drainage system, pulp line, return technical water piping; Value 4,95 mil. EUR; */ Survey Engineer*
12/2015	12/2016	*STRABAG* /Reconstruction on regional road P2335, section Krivogastani – Obrsani - Vogani, Rahabilitation on regional road P2335, section Lazani – Ropotovo and regional road P2336, section Ropotovo - Crniliste, (three sections), FIDIC, 3 mil.€, / Survey Engineer,
10/2015	12/2015	*STRABAG* /Rehabilitation on regional road P2340 (connection with P1101-Novaci) with length 21km, FIDIC, 1 mil.€, / Survey Engineer,
05/2014	10/2015	*STRABAG* /Reconstruction and Rehabilitation of the road section Veles-Kadrifakovo,Phase II Reconstruction and Rehabilitation: End of third lane (Veles landfill) – Lozovo, FIDIC, 5 mil.€, / Survey Engineer
09/2011	12/2011	»Inter-Kop« Mišar/ Construction of Highway E75, Section: Caričina Dolina - Vladičin Han, LOT 5: Road and bridges at sub-section Caričina Dolina -Tunnel Manajle (responsible contractor of geodetic works), /Site Geodetic Engineer, Responsible contractor for geodetic works

D.O.O. VODOVOD I KANALIZACIJA VIK DANILOVGRAD

362

STRABAG
STRABAG AG

01/2014	04/2014	»Inter-Kop« Mišar/ Construction of flood protection system in the basin of Kolubara River tributary- regulation of Tamnava river km 13 + 700 to km 19 + 364 (geodetic surveying and preparation of as-built design/Site Geodetic Engineer, Responsible contractor for geodetic works
10/2013	12/2013	»Inter-Kop« Mišar/ Construction works on landscaping with infrastructure and roads within the complex west of the street Dr Ivana Ribara, Novi Beograd (preparation of data for labeling, trail marking, as-built design/Site Geodetic Engineer, Responsible contractor for geodetic works
06/2013	09/2013	»Inter-Kop« Mišar/Construction of roads, landscaping, water, and sewerage, drainage of free surfaces, public lighting, greening and containers for garbage disposal, all the GP-6 (phase 2) in the Stepa Stepanović in Voždovac, Belgrade (preparation of data for labeling, trail marking, as-built design/Site Geodetic Engineer, Responsible contractor for geodetic works
11/2012	05/2013	»Inter-Kop« Mišar/LOT XXI - increased maintenance of the highway M19 Sabac-Debrc (preparing data from the project and marking on the ground, height and positional tracking works. Making the log-built surveying the state of pavement layers, as-built design/Site Geodetic Engineer, Responsible contractor for geodetic works
07/2012	12/2012	»Inter-Kop« Mišar/ Bridge over the Sava river - Obrenovac (preparing data from the project and marking on the ground, height and positional tracking works), /Site Geodetic Engineer, Responsible contractor for geodetic works
01/2012	06/2012	»Inter-Kop« Mišar/ Basic project prefabricated bridge construction of the overpass, pillar position 1 to pillar position 16 on the boulevard EUROPE. Section from Rumenački road to loop "NOVI SAD-north" on the highway E-75. (data preparation and marking the project on the ground, height and positional monitoring of works, production of geodetic log-built pavement layers). /Site Geodetic Engineer, Responsible contractor for geodetic works
02/2009-	07/2009	AD »Putevi« Užice/ Highway E75 section Bukurevac - Macedonian border from km 965 + 996.51 to km 976 + 250.30, (preparing data from the project and marking on the ground, height and positional tracking works, as built-design), /Site Geodetic Engineer
08/2009-	12/2009	AD »Putevi« Užice/ Highway E75 State border Horgos - Novi Sad, section from km 98 + 000.00 to km 108 + 000.00, (preparing data from the project and marking on the ground, height and positional tracking works, geodesic the log-built condition pavement layers, recording and making of as-built design), /Site Geodetic Engineer
01/2010-	03/2010	AD »Putevi« Užice/ Stone pit Draževići, shooting situations for calculating the amount of excavated material, /Site Geodetic Engineer
04/2010-	07/2010	AD »Putevi« Užice/ Regional road Bijelo Polje - Podgorica field recording in order to obtain a basis for designing, /Site Geodetic Engineer
08/2010	01/2011	AD »Putevi« Užice/ Highway 75 E GP Horgos - Novi Sad, section from km 1 + 125,00 to km 28 + 000,00 (the zero status, preparation of an elaborate of the zero state, data preparation from the project and marking on the ground, height and positional tracking works, making of minutes of geodesic-built condition of the pavement layers. Recording of as-built drawings and project of as-built drawings), /Site Geodetic Engineer
02/2011	08/2011	AD »Putevi« Užice/ Highway 75E section Bukurevac - Macedonian border from km 965 + 996.51 to km 976 + 250.30 (third lane), (the zero status, preparation of an elaborate of the zero state, preparation of data from the project and marking on the ground, height and positional tracking works. Making of minutes of geodesic-built condition of the pavement layers. /Site Geodetic Engineer

363

STRABAG
STRABAG AG

CERTIFIED TRANSLATION INTO ENGLISH

REPUBLIC OF SERBIA

FACULTY OF CIVIL ENGINEERING
UNIVERSITY OF BELGRADE

UNIVERSITY

DEGREE

NIKICA Branko PUST

BORN ON OCTOBER 10, 1977 IN VARAŽDIN, REPUBLIC OF CROATIA, WHO ENROLLED THE FACULTY OF CIVIL ENGINEERING – DEPARTMENT FOR GEODESY – IN ACADEMIC YEAR 1996/1997, GRADUATED THEREFROM ON JANUARY 16, 2009, NAMELY WITH GRADE POINT AVERAGE 7.75 (SEVEN AND 75/100) EARNED THROUGHOUT THE COURSE OF STUDIES AND GRADE 10 (TEN) AWARDED IN THE FINAL EXAMINATION.

BASED ON THE ABOVE, WE HEREBY AWARD THIS UNIVERSITY DEGREE AND THE PROFESSIONAL TITLE OF A BACHELOR OF SCIENCE IN GEODESY ENGINEERING.

DEGREE NUMBER 7538
IN BELGRADE, ON JANUARY 29, 2009

DEAN
Prof. Đorđe Vuksanović, PhD
(Signed)

CHANCELLOR
Prof. Branko Kovačević, PhD
(Signed)

(Round official seal of the University of Belgrade, Belgrade, Republic of Serbia)

.....the end of translation.....

SUDSKI PREVODILAC ZA ENGLESKI JEZIK
Maja Popović
STRABAG

364

CERTIFIED TRANSLATION INTO ENGLISH

I, the undersigned sworn-in court translator, appointed by the decision of the Ministry of Justice of the Republic of Serbia no. 740-06-968/2000-04 of April 12, 2000, certify hereby that this translation into English is fully true to the original text written in the Serbian language. My commission is permanent.

In Belgrade, November 23, 2015
No. 7364/2015

SUDSKI PREVODILAC ZA ENGLESKI JEZIK
Maja Popović
BEOGRAD

Maja Popović
Sworn-In Court Translator for English

D.O.O. VODOVOD I KANALIZACIJA VIK DANILOVGRAD

365

STRABAG
STRABAG AG

РЕПУБЛИКА СРБИЈА

ГРАЂЕВИНСКИ ФАКУЛТЕТ У БЕОГРАДУ
УНИВЕРЗИТЕТ У БЕОГРАДУ

ДИПЛОМА

О СТЕЧЕНОМ ВИСОКОМ ОБРАЗОВАЊУ

ПУСТ Бранко НИКИЦА

РОЂЕН-А 10.10. 1977. ГОДИНЕ У ВАРАЖДИНУ, РЕПУБЛИКА ХРВАТСКА,
УПИСАН-А 1996/97. ГОДИНЕ, А ДАНА 16.01.2009.ГОДИНЕ ЗАВРШИО-ЛА ЈЕ СТУДИЈЕ НА ГРАЂЕВИНСКОМ ФАКУЛТЕТУ НА ОДСЕКУ ЗА ГЕОДЕЗИЈУ, СА ОПШТИМ УСПЕХОМ 7,75 (СЕДАМ И 75./100) У ТОКУ СТУДИЈА И ОЦЕНОМ 10 (ДЕСЕТ) НА ДИПЛОМСКОМ ИСПИТУ.

НА ОСНОВУ ТОГА ИЗДАЛЕ-МУ ЈОЈ СЕ ОВА ДИПЛОМА О СТЕЧЕНОМ ВИСОКОМ ОБРАЗОВАЊУ И СТРУЧНОМ НАЗИВУ ДИПЛОМИРАНИ ГЕОДЕТСКИ ИНЖЕЊЕР.

РЕДНИ БРОЈ ИЗ ЕВИДЕНЦИЈЕ О ИЗДАТИМ ДИПЛОМАМА 7538
У БЕОГРАДУ, 29.01.2009.ГОДИНЕ

ДЕКАН
Проф. др Ворђе Вуксановић

РЕКТОР
Проф. др Бранко Ковачевић

766

STRABAG
STRABAG AG

CERTIFIED TRANSLATION INTO ENGLISH

(Coat of Arms of the Serbian Chamber of Engineers)

SERBIAN CHAMBER OF ENGINEERS

LICENCE

FOR AUTHORIZED CONTRACTOR

Pursuant to the Law on Planning and Construction and
the Articles of Association of the Serbian Chamber of Engineers

THE BOARD OF DIRECTORS OF THE SERBIAN CHAMBER OF ENGINEERS
hereby certifies that

Nikica B. Pust

Bachelor of Science in Geodetic Engineering
Personal ID number 1010977320002

is an Authorized Contractor
for geodetic works

Licence No.
471 G978 12

(Hexagonal official seal of the Serbian Chamber of Engineers)

In Belgrade,
September 6, 2012

PRESIDENT OF THE CHAMBER
(Signed)
Prof. Dragoslav Šumarac, PhD
Bachelor of Science in Civil Engineering

(Hexagonal official seal of the Serbian Chamber of Engineers)

.....the end of translation.....

367

SUDSKI PREVODILAC ZA ENGLESKI JEZIK Maja Popović BEOGRAD

STRABAG
STRABAG AG

CERTIFIED TRANSLATION INTO ENGLISH

I, the undersigned sworn-in court translator, appointed by the decision of the Ministry of Justice of the Republic of Serbia no. 740-06-968/2000-04 of April 12, 2000, certify hereby that this translation into English is fully true to the original text written in the Serbian language. My commission is permanent.

In Belgrade, November 23, 2015
No. 3922/2015

SUDSKI PREVODILAC ZA ENGLESKI JEZIK • BEOGRAD • Maja Popović

Maja Popović
Sworn-In Court Translator for English

D.O.O. VODOVOD I KANALIZACIJA DANILOVGRAD

368

STRABAG
STRABAG AG

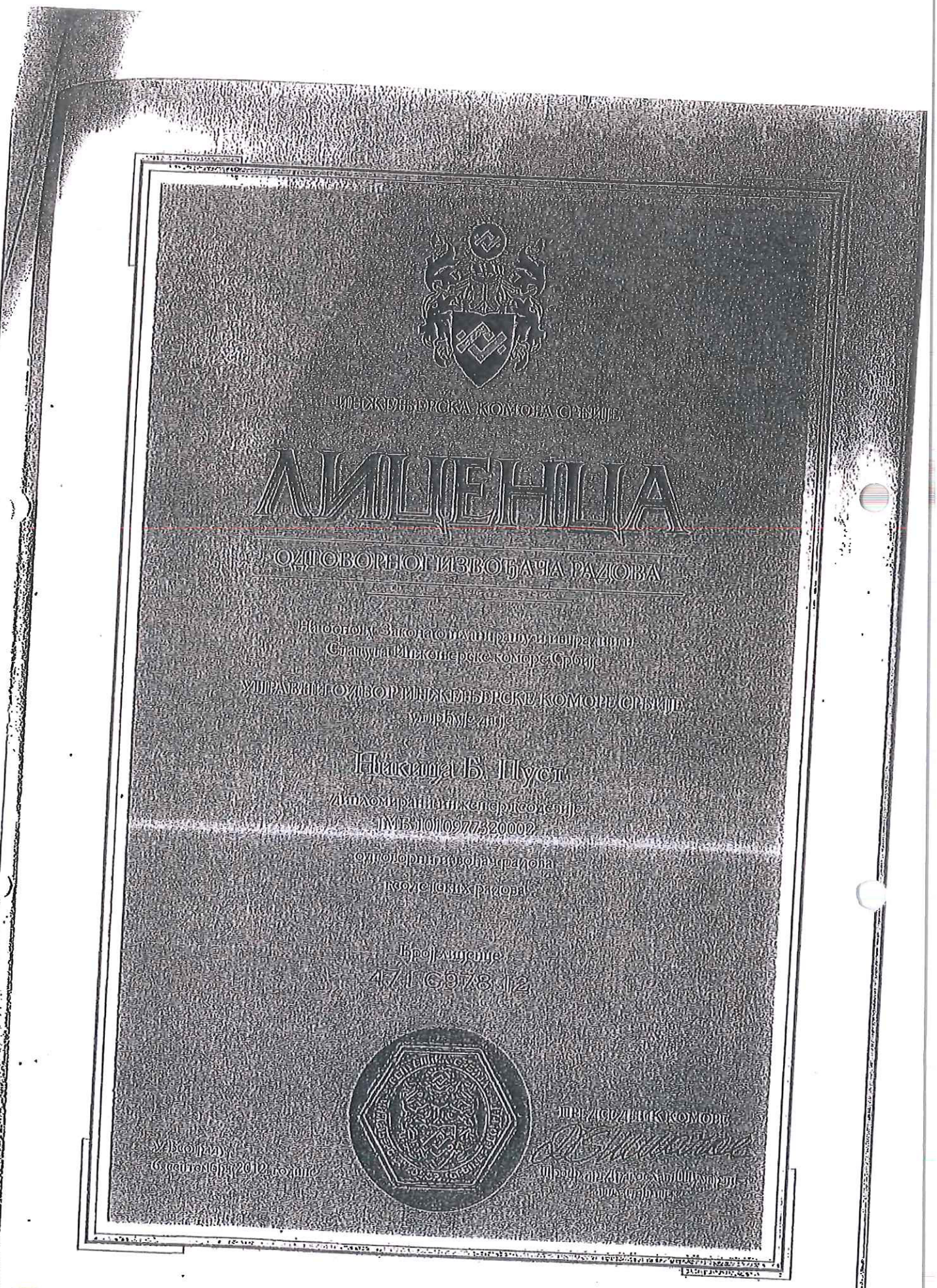

ИНЖЕЊЕРСКА КОМОРА СРБИЈЕ

ЛИЦЕНЦА

ОДГОВОРНОГ ИЗВОЂАЧА РАДОВА

На основу Закона о планирању и изградњи и Статута Инжењерске коморе Србије

УПРАВНИ ОДБОР ИНЖЕЊЕРСКЕ КОМОРЕ СРБИЈЕ

утврђује да је

Никица Б. Пуст

дипломирани инжењер геодезије

ЈМБ 1010977320002

одговорни извођач радова

геодетских радова

Број лиценце

471 G978 12

У Београду

6. септембра 2012. године

ПРЕДСЕДНИК КОМОРЕ

Проф. др Драгослав Шумарац

ДИПЛОМИРАНИ ИНЖЕЊЕР ГЕОДЕЗИЈЕ

ЈМБ 1010977320002

одговорни извођач радова

геодетских радова

Број лиценце

471 G978 12

369

STRABAG

STRABAG AG

CERTIFIED TRANSLATION INTO ENGLISH

I, the undersigned sworn-in court translator, appointed by the decision of the Ministry of Justice of the Republic of Serbia no. 740-06-968/2000-04 of April 12, 2000, certify hereby that this translation into English is fully true to the original text written in the Serbian language. My commission is permanent.

In Belgrade, November 23, 20
No. 7360/2015

SUDSKI PREVODILAC ZA ENGLESKI JEZIK
Maja Popović
BEOGRAD

Maja Popović
Sworn-In Court Translator for English

D.O.O. VODOVOD I KANALIZACIJA DANILOVGRAD

270

STRABAG
STRABAG AG

Resume of Proposed Personnel

The Tenderer shall provide all the information requested below for each of the personnel listed the schedule of the Contractor's Personnel. Fields with asterix (*) shall be used for evaluation.

In case of a JVCA the form shall be submitted for each partner of the JVCA.

Position* LAND SURVEYOR		
Personnel information	Name: Bozidar RSUMOVIC	Date of birth: 24.09.1965.
	Professional qualifications: Master in Geodesy Licences 471 J228 15, 372 O012 15	
Present employment	Name of employer: STRABAG	
	Address of employer: Antifašističke borbe 13 a, 11070 Belgrade , Serbia	
	Telephone: +381 (11) 222 17 00	Contact (manager / personnel officer) Guenther Hartweger
	Fax: +381 (11) 222 18 40	E-mail: bozidar.rsumovic@strabag.com
	Job title: Site Surveyor	Years with present employer: 6 years

Summarize professional experience in reverse chronological order. Indicate particular technical and managerial experience relevant to the project.

From*	To*	Company, Project, Position and Relevant Experience*
2016	Present	Strabag Belgrade Construction of toll station Vrčin, Site Surveyor
2014	2015	Strabag Belgrade Project : LOT 4 Rehabilitation of E-75 Motorway from Mali Požarevac to Ralja (right carriageway) / Site Surveyor
2013	2014	Strabag Belgrade Project : LOT B5.3: Construction of the "Petlovo Brdo" interchange and "Orlovača" interchange (phase II) / Site Surveyor
11/2011	2013	Strabag Belgrade Project : Rehabilitation road M-19, TENT "B" – Mišar (Šabac) - 28 km / Site Surveyor
11/2006	10/2011	Alpine d.o.o. Belgrade Project : Motorway E-75 (M-22) Project Belgrade – Novi Sad LOT 3 Design and Construction of the New Beska Bridge, Beška LOT 5 Repair, Remedial works and Rehabilitation to the Existing Beska Bridge, Beška / Site Surveyor
09/2004	11/2006	MS Premer, Belgrade Project : Practical work at various survey projects, traversing, leveling and alignment of structure, topographic and buildings survey, cadastral works, ... / Main Surveyor Engineer

STRABAG
STRABAG AG

11/2003	09/2004	Ratko Mitrović - Niskogradnja, Belgrade Project : Rehabilitation road Bela Palanka - Pirot - 30 km, Construction of highway by-pass Belgrade, Dobanovci – Ostruznica, Construction of highway Belgrade–Novi Sad, part Batajnica - Stara Pazova - 8km, Construction of two bridges on highway Belgrade – Nis near Belgrade's Arena / Main Surveyor Engineer
06/1995	10/2003	Meridijanprojekt, Belgrade Main Project in Libya (four years in period 1995 – 2003): -Field surveying and making maps for preparation of design for urban area near cities: Nalut, Zavia, streets in Bani Walid city -Established, measured, calculation traverse network for Libyan railway from Ras Jedir (Tunisian border) to Sert, length 620 km -Field surveying and making maps for preparation of design for railway Hesha – Sirt, length 124 km -Field surveying and making maps for preparation of design for intersection of railway Hesha – Sirt and roars, pipelines, electric long distance line, and surveying field for four railway station, area 520 hectare -Updating map of Misurata city, 9000 hectares -Field surveying and making maps for preparation of design for Water Transmission And Distribution System Project For Benghazi Plan Agricultural Project, pipeline length 430 km -Field surveying and making maps for preparation of design for: Project For Supplying Garabuli Agricultural Project From Great Man-Made River (Western Jamahiriya) System, pipeline length 350 km -Field surveying and making maps for preparation of design for: Project For Western Wadis Development Water Distribution System (Wadis: Tilal, Qubaybah And Jarif), pipeline length 362 km, area 11000 hectare /Main Surveyor Engineer, Project Manager Main Project in Serbia: -Updating maps for area Julino brdo in Belgrade, area 80 hectares -Updating maps for Outside magistral tangent Belgrade, area 550 hectares -Scanning, transformation and digitalization maps for HI HIPOL Odzaci area 41 hectares -Updating maps for Belgrade's port, scale 1:500, area 100 hectares -Field surveying and making maps for gas pipeline design Kraljevo - Vrnjacka banja, pipeline length 21 km -Monitoring railway bridge in Trebaljevo (near Kolašin, Crna Gora) 3 times a year / Main Surveyor Engineer, Project Manager
07/1991	05/1995	Geodetski biro Niš, Branch Office Belgrade Project : Practical work at various survey projects, traversing, leveling and alignment of structure, topographic and buildings survey – scale 1:200 1:500 1:1000, cadastral works, processing data, making maps, /Surveyor Engineer, Main Surveyor Engineer
02/1990	10/1990	Trudbenik, Belgrade Project : P1103 Namaniya, Iraq Construction roads and streets / Site Surveying Engineer
06/1989	12/1989	MPRO JEDINSTVO, Sevojno Project : P1103 Namaniya, Iraq Pipeline construction – water, irrigation and sewerage / Site Surveying Engineer

STRABAG
STRABAG AG

ИНЖЕЊЕРСКА КОМОРА СРБИЈЕ

ЛИЦЕНЦА

ОДГОВОРНОГ ИЗВОЂАЧА РАДОВА

На основу Закона о планирању и изградњи и
Статута Инжењерске коморе Србије

УПРАВНИ ОДБОР ИНЖЕЊЕРСКЕ КОМОРЕ СРБИЈЕ
утврђује да је

Божидар М. Ршумовић

дипломирани инжењер геодезије
ЛИБ 09065074241

одговорни извођач радова

геодетских радова

Број лиценце
471 J228 15

У Београду,
30. априла 2015. године

ПРЕДСЕДНИК КОМОРЕ

Проф. др Милисав Дамњановић
дипл. инж. арх.

373

STRABAG
STRABAG AG

Coat of arms

ENGINEERS CHAMBER OF SERBIA

LICENSE
OF A RESPONSIBLE CONTRACTOR

Pursuant to the Law on Planning and Construction and
Statute of the Engineers Chamber of Serbia

THE MANAGEMENT BOARD OF THE ENGINEERS CHAMBER OF SERBIA
establishes that

BOZIDAR M. RSUMOVIC
a graduate geodesy engineer
Personal identification number: 09065074241

is a responsible Contractor
for geodetic works

License number:
471 J228 15

In Belgrade
April 30, 2015.

PRESIDENT OF THE CHAMBER
Prof. dr Milisav Damnjanovic
(signed)
graduate engineer of architecture

Stamp: Republic of Serbia, Engineers Chamber of Serbia

I, Samanta Tošković, Interpreter/translator for English language, appointed in Montenegro by the Decision of the Minister of Justice number: 03-745-1567/17-1 of 18 April 2017, for the period of five years ,certify this is the true translation of the original document.
Podgorica,12.09.2017.

374

STRABAG
STRABAG AG

ИНЖЕЊЕРСКА КОМОРА СРБИЈЕ

ЛИЦЕНЦА

ОДГОВОРНОГ ПРОЈЕКТАНТА

На основу Закона о планирању и изградњи и
Статута Инжењерске коморе Србије

УПРАВНИ ОДБОР ИНЖЕЊЕРСКЕ КОМОРЕ СРБИЈЕ
утврђује да је

Божидар М. Ршумовић

дипломирани инжењер геодезије
ЛИБ 09065074241

одговорни пројектант
геодетских пројеката

Број лиценце
372 0012 15

У Београду,
16. априла 2015. године

ПРЕДСЕДНИК КОМОРЕ

Проф. др Милисав Дамњановић
дипл. инж. арх.

375

STRABAG
STRABAG AG

Resume of Proposed Personnel

The Tenderer shall provide all the information requested below for each of the personnel listed the schedule of the Contractor's Personnel. Fields with asterix (*) shall be used for evaluation.

In case of a JVCA the form shall be submitted for each partner of the JVCA.

Position* **Construction Engineer**		
Personnel information	Name * **Marko LEKOVIĆ**	Date of birth **18.02.1980.**
	Professional qualifications **Bachelor of Science in Civil Engineering (BSc CE) Licenses 310 J579 10, 410 F373 10**	
Present employment	Name of Employer STRABAG	
	Address of Employer **Antifašističke borbe 13a, 11070 Belgrade, Serbia**	
	Telephone **+381(011)/222 17 00**	Contact (manager / personnel officer) **Guenther Hartweger**
	Fax **+381(011)/222 18 40**	E-mail **marko.lekovic@strabag.com**
	Job title **Assistant Project Manager**	Years with present Employer **6 years**

Summarize professional experience in reverse chronological order. Indicate particular technical and managerial experience relevant to the project.

From*	To*	Company, Project, Position and Relevant Experience*
07/2014	12/2015	STRABAG, Assistant Project Manager, Rehabilitation of the motorway section Veles–Katlanovo, as part of Corridor X; Reconstruction and Rehabilitation of the road section Veles–Kadrifakovo, Phase 2: End of third line-Veles landfill-Lozovo, FIDIC
09/2013	06/2014	STRABAG, Assistant Project Manager, Reconstruction and Rehabilitation of the road section Veles–Kadrifakovo, Phase 1: Interchange Veles-end of third line-Veles landfill-Lozovo, Saramzalino, FIDIC
11/2010	08/2013	STRABAG / LOT A2 Design and construction of motorway E75 and design and construction of "Dobanovci" interchange / Site Engineer for bridge works

376

STRABAG
STRABAG AG

2010	2010	AD „Putevi" Uzice / Construction of highway E – 763, Belgrade – Pozega, sector I, section IV: Ub – Lajkovac / Site Engineer
2010	2010	AD „Putevi" Uzice / Construction of highway E – 75, Horgos – Subotica / Site Engineer for bridge works
2008	2010	AD „Putevi" Uzice / Construction of bridges (left and right lane) over river Zapadna Morava and reconstruction of access roads, Čačak / Site Engineer
2008	2008	AD „Putevi" Uzice / Construction of bridge over Dobrinjska river, Cestobrodica, Pozega / Site Engineer
2007	2008	AD „Putevi" Uzice / Construction of bridge in Lipci, Risan, Montenegro / Site Engineer
07/2014	12/2015	STRABAG, Assistant Project Manager, Rehabilitation of the motorway section Veles–Katlanovo, as part of Corridor X; Reconstruction and Rehabilitation of the road section Veles–Kadrifakovo, Phase 2: End of third line-Veles landfill-Lozovo, FIDIC
09/2013	06/2014	STRABAG, Assistant Project Manager, Reconstruction and Rehabilitation of the road section Veles–Kadrifakovo, Phase 1: Interchange Veles-end of third line-Veles landfill-Lozovo, Saramzalino, FIDIC
11/2010	08/2013	STRABAG / LOT A2 Design and construction of motorway E75 and design and construction of "Dobanovci" interchange / Site Engineer for bridge works
2010	2010	AD „Putevi" Uzice / Construction of highway E – 763, Belgrade – Pozega, sector I, section IV: Ub – Lajkovac / Site Engineer
2010	2010	AD „Putevi" Uzice / Construction of highway E – 75, Horgos – Subotica / Site Engineer for bridge works
2008	2010	AD „Putevi" Uzice / Construction of bridges (left and right lane) over river Zapadna Morava and reconstruction of access roads, Čačak / Site Engineer

377

STRABAG
STRABAG AG

РЕПУБЛИКА СРБИЈА

ГРАЂЕВИНСКИ ФАКУЛТЕТ У БЕОГРАДУ
УНИВЕРЗИТЕТ У БЕОГРАДУ

ДИПЛОМА

О СТЕЧЕНОМ ВИСОКОМ ОБРАЗОВАЊУ

ЛЕКОВИЋ Видоје МАРКО

РОЂЕН-А 18. 02. 1980. ГОДИНЕ У ПОЖЕГИ, РЕПУБЛИКА СРБИЈА,
УПИСАН-А 1999/00. ГОДИНЕ, А ДАНА 16. 10. 2007. ГОДИНЕ ЗАВРШИО-ЛА ЈЕ СТУДИЈЕ НА ГРАЂЕВИНСКОМ ФАКУЛТЕТУ НА ОДСЕКУ ЗА КОНСТРУКЦИЈЕ, СА ОПШТИМ УСПЕХОМ 7,54 - (СЕДАМ И 54 /100) У ТОКУ СТУДИЈА И ОЦЕНОМ 10 (ДЕСЕТ) НА ДИПЛОМСКОМ ИСПИТУ.

НА ОСНОВУ ТОГА ИЗДАЈЕ-МУ ЈОЈ СЕ ОВА ДИПЛОМА О СТЕЧЕНОМ ВИСОКОМ ОБРАЗОВАЊУ И СТРУЧНОМ НАЗИВУ ДИПЛОМИРАНИ ГРАЂЕВИНСКИ ИНЖЕЊЕР ЗА КОНСТРУКЦИЈЕ.

РЕДНИ БРОЈ ИЗ ЕВИДЕНЦИЈЕ О ИЗДАТИМ ДИПЛОМАМА 7267.
У БЕОГРАДУ, 17.10. 2007.ГОДИНЕ

ДЕКАН
Проф. др Ђорђе Вуксановић

РЕКТОР
Проф. др Бранко Ковачевић

378

STRABAG
STRABAG AG

CERTIFIED TRANSLATION INTO ENGLISH

REPUBLIC OF SERBIA

FACULTY OF CIVIL ENGINEERING
UNIVERSITY OF BELGRADE

UNIVERSITY

DEGREE

MARKO Vidoje LEKOVIĆ

BORN ON FEBRUARY 18, 1980 IN POŽEGA, REPUBLIC OF SERBIA, WHO ENROLLED THE FACULTY OF CIVIL ENGINEERING – DEPARTMENT OF STRUCTURES – IN ACADEMIC YEAR 1999/2000, GRADUATED THEREFROM ON OCTOBER 16, 2007, NAMELY WITH GRADE POINT AVERAGE 7.54 (SEVEN AND 54/100) ACHIEVED THROUGHOUT THE COURSE OF STUDIES AND GRADE 10 (TEN) AWARDED IN THE FINAL EXAMINATION.

BASED ON THE ABOVE, WE HEREBY AWARD THIS UNIVERSITY DEGREE AND THE PROFESSIONAL TITLE OF A GRADUATE CIVIL ENGINEER FOR STRUCTURES.

DEGREE NUMBER 7267
IN BELGRADE, ON OCTOBER 17, 2007

DEAN
Prof. Đorđe Vuksanović, PhD
(Signed)

CHANCELLOR
Prof. Branko Kovačević, PhD
(Signed)

(Round official seal of the University of Belgrade, Belgrade, Republic of Serbia)

.....the end of translation.....

379

SUDSKI PREVODILAC ZA ENGLESKI JEZIK
Maja Popović
STRABAG

CERTIFIED TRANSLATION INTO ENGLISH

I, the undersigned sworn-in court translator, appointed by the decision of the Ministry of Justice of the Republic of Serbia no. 740-06-968/2000-04 of April 12, 2000, certify hereby that this translation into English is fully true to the original text written in the Serbian language. My commission is permanent.

In Belgrade, August 19, 2015
No. 5253/2015

SUDSKI PREVODILAC ZA ENGLESKI JEZIK • BEOGRAD •
Maja Popović

Maja Popović
Sworn-In Court Translator for English

D.O.O. VODOVOD I KANALIZACIJA VIK NIKŠIĆ

380

STRABAG
STRABAG AG

CERTIFIED TRANSLATION INTO ENGLISH

SERBIAN CHAMBER OF ENGINEERS

LICENCE

CHIEF CONTRACTING ENGINEER

Pursuant to the Law on Planning and Construction
and the Statute of the Serbian Chamber of Engineers

THE MANAGEMENT BOARD OF THE SERBIAN CHAMBER OF ENGINEERS
appoints

Marko V. Leković

Graduate Civil Engineer
Personal identification number 1802980791818

the Chief Contracting Engineer

of civil engineering structures and construction and finishing works on
building engineering, civil engineering and hydraulic engineering structures

Licence number
410 F373 10

In Belgrade,
December 9, 2010

Chamber President
Prof. Dragoslav Šumarac, PhD
Graduate Civil Engineer
(Signed)

*(Official hexagonal seal of the Serbian Chamber of Engineers,
Belgrade, Republic of Serbia)*

.....the end of translation.....

381

SUDSKI PREVODILAC ZA ENGLESKI JEZIK
Maja Popović
STRABAG
STRABAG

CERTIFIED TRANSLATION INTO ENGLISH

I, the undersigned sworn-in court translator, appointed by the decision of the Ministry of Justice of the Republic of Serbia no. 740-06-968/2000-04 of April 12, 2000, certify hereby that this translation into English is fully true to the original text written in the Serbian language. My commission is permanent.

In Belgrade, August 19, 2015
No. 5250/2015

SUDSKI PREVODILAC ZA ENGLESKI JEZIK • BEOGRAD • Maja Popović

Maja Popović
Sworn-In Court Translator for English

382

STRABAG
STRABAG AG

CERTIFIED TRANSLATION INTO ENGLISH

SERBIAN CHAMBER OF ENGINEERS

LICENCE

CHIEF CONTRACTING ENGINEER

Pursuant to the Law on Planning and Construction
and the Statute of the Serbian Chamber of Engineers

THE MANAGEMENT BOARD OF THE SERBIAN CHAMBER OF ENGINEERS
appoints

Marko V. Leković

Graduate Civil Engineer
Personal identification number 1802980791818

the Chief Contracting Engineer

of civil engineering structures and construction and finishing works on
building engineering, civil engineering and hydraulic engineering structures

Licence number
410 F373 10

In Belgrade,
December 9, 2010

Chamber President
Prof. Dragoslav Šumarac, PhD
Graduate Civil Engineer
(Signed)

*(Official hexagonal seal of the Serbian Chamber of Engineers,
Belgrade, Republic of Serbia)*

.....the end of translation.....

383

SUDSKI PREVODILAC ZA ENGLESKI JEZIK
Maja Popović
BEOGRAD

STRABAG

CERTIFIED TRANSLATION INTO ENGLISH

I, the undersigned sworn-in court translator, appointed by the decision of the Ministry of Justice of the Republic of Serbia no. 740-06-968/2000-04 of April 12, 2000, certify hereby that this translation into English is fully true to the original text written in the Serbian language. My commission is permanent.

In Belgrade, August 19, 2015
No. 5250/2015

SUDSKI PREVODILAC ZA ENGLESKI JEZIK • BEOGRAD • Maja Popović

Maja Popović
Sworn-In Court Translator for English

STRABAG
STRABAG AG

VOLUME 1

SECTION 4

FORM 4.6.1.3

PROFESSIONAL EXPERIENCE OF KEY STAFF

CURRICULUM VITAE

(Maximum 3 pages + 3 pages of annexes)

Proposed position in the contract: **Civil Engineer**

1. Surname: **Rakic**
2. Name: **Goran**
3. Date and place of birth:12.12.1970
4. Nationality: **Serbian**
5. Civil status: **married**
   Address (phone/fax/e-mail): **goran.rakic@strabag.com**
6. Education:

Institutions:	*Faculty of Civil Engineering, Department for Structural Engineering* *(Diploma in Civil Engineering - Equivalent to M.Sc.)* University of Belgrade, Serbia
Date: *From (month/year)* *To (month/year)*	 *09/1999* *10/2005*
Degree or qualification:	*MA CE*

7. Language skills

Indicate on a scale of 1 to 5 (1 — excellent; 5 — basic):

Language	*Level*	*Passive*	*Spoken*	*Written*
Serbian	*Mother tongue*			
English	*Fluent*		*1*	*1*

8. Membership of professional bodies: **Serbian Chamber of Engineers, Licence 410F32710**
9. Other skills (e.g. computer literacy): computer literacy (Microsoft Office, AutoCad, MS Project)
10. Current position: **Civil Engineer**
11. Years of professional experience: **12**
12. Key qualifications:
13. Specific experience in non-industrialised countries: none
14. Professional experience:

Date: from (month/year) to (month/year)	*01/2017-present*
Place	Macedonia, Serbia
Company/organisation	*STRABAG*
Position	*Civil Engineer*

STRABAG
STRABAG AG

Job description	-(01/2017-present) Construction of Tailings spill facility no.4 in Mine Sasa, M.Kamenica; Tunnel, gallery and tunnel clear water, contact injection, gallery extension of tunnel, fast flow, waterfall, berm, channel, pre dam, drainage system, pulp line, return technical water piping; Value 4,95 mil. EUR;
Date: from (month/year) to (month/year)	10/2011-12/2016
Place	Serbia
Company/organisation	EPTISA – Supervision Consultancy Services
Position	Material Engineer (ME) Assistant Resident Engineer (ARE) for Tunnels
Job description	-(10/2011-12/2016) E80 & E75 Highway construction Project – Tunnels Progon and Przojna Padina, Dimitrovgrad Bypass/ Tunnels Manajle & Predejane, Corridor X , Serbia Employer: KORIDORI SRBIJE, Project Value ~ € 50(E80)+50(E75) million, FIDIC ***Duties:*** -Quality control and quality assurance for material used for the purposes of the entire project, including valid certificates and attestation, in all aspects ensuring compliance with technical specification and effective standards. -Supervision of examination and testing of materials (lab and in situ), control of implementation of testing programme in line with standards. -Supervision of the Contractors in all aspects, in terms of fulfillment of their obligations, responsibilities and undertakings made with respect to carrying out and completing of the Works contracts; -Administration of the Works Contracts and ensuring compliance with all contractual clauses (according to FIDIC), whether related to quality or quantities of work, provision of necessary evidentiary records and analyses; -Provision of necessary measurements and controls of the works' quality, co-ordination of all engineering decisions, including improvement/optimization of designs, if necessary, with the aim of ensuring proper implementation of the Works Contracts; -Assurance of measurement of quantities of performed works and certification of the effectively completed quantities; -Control of accuracy of the estimated remaining quantities to be included in the Contractors' completion programmes within the periods allowed; -Implementation of all necessary steps to protect the interests of the Client, to ensure the timely supervision and control of the Works and avoid occurrences of disorders of construction during the Works; -Monitoring design errors and making recommendations to stop their reoccurrence -Compiling of reports (daily, weekly, monthly) in agreed formats, as well as contributions to progress and other reports. -Preparation and keeping track of Minutes of Meetings with the Contractor and the Employer.
Date: from (month/year) to (month/year)	08/2009-09/2011
Place	Serbia, Algeria
Company/organisation	HIDROTEHNIKA-HIDROENERGETIKA - Contractor
Position	Chief Site Engineer, Site engineer

STRABAG

Job description	-(08/2009-09/2011) Construction of Belgrade Main Sewer Interceptor - Tunnel Visnjica Employer: Belgrade Land Development Public Agency, Serbia Project Value: ~ € 50 million/ Position: Chief Site Engineer ***Duties:*** -Ensuring proper execution and coordination of underground works on the TBM -Management of external supply machines (logistics), planning, monitoring and analysis operations -Workforce management, handling and optimization of various labor issues. -Preparation of Works' Schedule and timescale, organization of procurement activities regarding materials / equipment -Implementation of quality system procedures, conducting quality assurance and compliance for materials and written records, -preparation of evidentiary construction records, enabling effective communication with the Employer by compilation of reports. -Supervision of Subcontractors' activities and ensuring fulfillment of their contractual obligations -(02/2007-07/2009) Construction of two Earth-fill dams "Ourkiss" and "Kissir" Oum El Bouaghi / Jijel, Algeria, Employer: A.N.B.T. "Algeria, Project Value: ~ € 38 million (Ourkiss) & ~ € 35 million (Kissir)/ Position: Chief Site Engineer / Head of Business unit ***Duties:*** -Management of site roads construction, concrete works in the gallery and inlet and outlet stuctures, earthworks and establishment of quarry; -Preparation of Programme of Works, payment certificates, reports. -Materials & Resources forecasting & procurement process. -Report & Maintain HSE Records & Monitor for safe working procedures. -Using Techniques & Motivating Manpower to reduce the waste & increase cost efficiency. -(04/2006-01/2007) Relocation and regulation of the River Kolubara, Employer: R.B."Kolubara" Veliki Crljani, Lazarevac, Serbia, Project Value: ~ € 8,5 million/ Position: Chief Site Engineer / Head of Business unit ***Duties:*** -Coordination of I phase relocation and regulation works of the Kolubara River for the purposes of open pit exploitation. -Management of the excavation works of new river bed, implying sealing the river bed with clay and geo-membrane, performance of embankment and fore banks along the river bed, performance of concrete diaphragm walls and landscaping works -General organization activities enabling proper functioning of the site. -(11/2005-04/2006) Construction of Earth-filled dam "Rovni" , Valjevo, Serbia Employer: Public Water Management Company "Srbijavode" Project Value: ~ € 40 million, / Position: Site Engineer (earth works, slope protection works) ***Duties :*** -Organization and execution of clay core filling, filter and rock (basalt) and slope protection works.

STRABAG
STRABAG AG

СРБИЈА И ЦРНА ГОРА
РЕПУБЛИКА СРБИЈА

ГРАЂЕВИНСКИ ФАКУЛТЕТ У БЕОГРАДУ
УНИВЕРЗИТЕТ У БЕОГРАДУ

ДИПЛОМА

О СТЕЧЕНОМ ВИСОКОМ ОБРАЗОВАЊУ

РАКИЋ Дарко ГОРАН

РОЂЕН-А 12.12. 1970. ГОДИНЕ У БЕОГРАДУ, САВСКИ ВЕНАЦ, РЕПУБЛИКА СРБИЈА, СиЦГ, УПИСАН-А 1989/90. ГОДИНЕ, А ДАНА 14.6.2005. ГОДИНЕ ЗАВРШИО-ЛА ЈЕ СТУДИЈЕ НА ГРАЂЕВИНСКОМ ФАКУЛТЕТУ НА ОДСЕКУ ЗА КОНСТРУКЦИЈЕ, СА ОПШТИМ УСПЕХОМ 7,16 (СЕДАМ И 16/100) У ТОКУ СТУДИЈА И ОЦЕНОМ 9 (ДЕВЕТ) НА ДИПЛОМСКОМ ИСПИТУ.

НА ОСНОВУ ТОГА ИЗДАЈЕ-МУ ЈОЈ СЕ ОВА ДИПЛОМА О СТЕЧЕНОМ ВИСОКОМ ОБРАЗОВАЊУ И СТРУЧНОМ НАЗИВУ ДИПЛОМИРАНИ ГРАЂЕВИНСКИ ИНЖЕЊЕР ЗА КОНСТРУКЦИЈЕ.

РЕДНИ БРОЈ ИЗ ЕВИДЕНЦИЈЕ О ИЗДАТИМ ДИПЛОМАМА 6835.
У БЕОГРАДУ, 21. 6. 2005.ГОДИНЕ

ДЕКАН
Проф. др Ђорђе Вукасовић

РЕКТОР
Проф. др Дејан Поповић

388

STRABAG
STRABAG AG

Resume of Proposed Personnel

The Tenderer shall provide all the information requested below for each of the personnel listed the schedule of the Contractor's Personnel. Fields with asterix (*) shall be used for evaluation.

Position * **Electrical Works Manager**		
Personnel information	Name* **Zoran Živković**	Date of birth : 14.11.1952
	Professional qualifications : Bachelor of Science in Electrical Engineering (BS EE)	
Present employment	Name of employer : STRABAG	
	Address of employer : Antifašističke borbe 13a, 11070 Belgrade, Serbia	
	Telephone +381(011)/222 17 00	Contact (manager / personnel officer) Dragan Petrović
	Fax +381(011)/222 18 40	E-mail zoran.zivkovic @strabag.com
	Job title Electrical Engineer	Years with present employer: 6 years

Summarize professional experience in reverse chronological order. Indicate particular technical and managerial experience relevant to the project.

From*	To *	Company, Project, Position and Relevant Technical and Management Experience*
2014	u toku	STRABAG / Calculations of offers for different objects / Senior Electrical engineer
2011	2014	STRABAG. / Construction works on the facilities of the Olympic Village in Sochi - Zona I 4.5 6 / Responsible designer for electrical installations and responsible contractor for electrical works / Papers Project workshop documentation
2009	2011	Projmetal – Beograd / Business Center Blok 23 - Novi Beograd / Responsible contractor for electrical work
2010	2010	Projmetal – Beograd / Hotel Rubin Krusevac / Responsible contractor for electrical work
2009	2009	Projmetal – Beograd / Plant for water preparing in Indija / Responsible contractor for electrical work
2008	2010	Projmetal – Beograd / Department stores Belgrade (Terazije, from Belgrade, Sava, Dušanovac, Miljakovac, Kragujevac, Kraljevo, Uzice, Bajina Basta, Vranje, Leskovac, Nis, Pirot, Knjazevac, Bor / Responsible contractor for electrical work
2008	2008	Projmetal – Beograd / Factory for glasses Grossoptic I Diopta – Zelengora Umka / Responsible contractor for electrical work

STRABAG
STRABAG AG

2008	2008	Projmetal – Beograd / Flight Control Agency of Serbia and Montenegro - Reconstruction of electrical installations of the Area Control of Airport Nikola Tesla / The responsible contractor and designer of electrical works, design and installation of electrical equipment with controlled electric drive
2007	2007	Projmetal – Beograd / Commercial shopping center Zira in Belgrade / Responsible contractor for electrical work
2007	2007	Projmetal – Beograd / Surgery I floor KBC Dragisa Mišović in Belgrade / Responsible contractor for electrical work
2006	2006	Projmetal – Beograd / Factory for construction adhesives - Storage for thermo sensitive and flammable Finished products Henkel Merima Krusevac / Responsible contractor for electrical work
2006	2006	Projmetal – Beograd / Townhouse Lajkovac / Responsible contractor for electrical work
2005	2005	Projmetal – Beograd / Neutralization of waste water at the plant for hot galvanizing Metal AD Ćuprija / Responsible contractor for electrical work
2004	2006	Projmetal – Beograd / Telekom Serbia - Design and installation of electrical equipment with regulated electric drive base stations for mobile telephony / responsible designer and contractor for electrical works
2004	2004	Projmetal – Beograd / Department of Urology, KBC Dragiša Beograd Mišović / contractor responsible for electrical work
2004	2004	Projmetal – Beograd / Waterworks Makis - reconstruction of the plant for waste water treatment / contractor responsible for electrical works
2004	2005	Projmetal – Beograd / Pumping station Kladnica RB Kolubara PK Baroševac- Elektroprivreda Serbia / responsible contractor electrical works
2004	2004	Projmetal – Beograd / Hotel Alexander Palace (Qe Pasa) / responsible contractor electrical works
2001	2004	Goša, Smederevska Palanka / The transport and distribution system of bunkers in the open pit mine Kostolac - Elektroprivreda Serbia / responsible contractor for electrical works
1998	1998	Goša, Smederevska Palanka / Reconstruction of electrical equipment at the open pit Obilic - Kosovo / responsible contractor for electrical works

STRABAG
STRABAG AG

1995	1998	Goša, Smederevska Palanka / Coke machines with electric drives for metallurgical plants in Russia / responsible designer and contractor for electrical works
1991	1991	Goša, Smederevska Palanka / Perform electrical work in the port of Misurata in Libya / contractor responsible for electrical works
1987	1987	Goša, Smederevska Palanka / Design and installation of electrical equipment with regulated electric drive slag granulator for Metarulški ZAPSIB plant in Russia / responsible contractor for electrical works
1985	1985	Goša, Smederevska Palanka / Machine for coating crucibles for Foundry Metallurgical Plant in Russia Tuli- / responsible contractor electrical works

VODOVOD I KANALIZACIJA DANILOVGRAD

STRABAG
STRABAG AG

ИНЖЕЊЕРСКА КОМОРА СРБИЈЕ

ЛИЦЕНЦА

ОДГОВОРНОГ ПРОЈЕКТАНТА

На основу Закона о планирању и изградњи и
Статута Инжењерске коморе Србије

УПРАВНИ ОДБОР ИНЖЕЊЕРСКЕ КОМОРЕ СРБИЈЕ
утврђује да је

Зоран С. Живковић

дипломирани инжењер електротехнике
ЈМБ 1411952761548

одговорни пројектант

електроенергетских инсталација ниског и средњег напона

Број лиценце

350 4404 03

У Београду,
13. новембра 2003. године

ПРЕДСЕДНИК КОМОРЕ
Милош Лазовић
Проф. др Милош Лазовић
дипл. грађ. инж.

392

STRABAG
STRABAG AG

Coat of arms

ENGINEERS CHAMBER OF SERBIA

LICENSE
OF A RESPONSIBLE DESIGNER

Pursuant to the Law on Planning and Construction and
Statute of the Engineers Chamber of Serbia

THE MANAGEMENT BOARD OF THE ENGINEERS CHAMBER OF SERBIA
establishes that

ZORAN S. ZIVKOVIC
a graduate electrical engineer
Personal identification number: 1411952761548

is a responsible Designer
for low and medium electrical installations

License number:
350 4404 03

In Belgrade
November 13, 2003.

PRESIDENT OF THE CHAMBER
Prof. dr Milos Lazovic
(signed)
graduate civil engineer

Stamp: Republic of Serbia, Engineers Chamber of Serbia

I, Samanta Tošković, Interpreter/translator for English language, appointed in Montenegro by the Decision of the Minister of Justice number: 03-745-1567/17-1 of 18 April 2017, for the period of five years ,certify this is the true translation of the original document. Podgorica,12.09.2017.

STRABAG
STRABAG AG

ИНЖЕЊЕРСКА КОМОРА СРБИЈЕ

ЛИЦЕНЦА

ОДГОВОРНОГ ИЗВОЂАЧА РАДОВА

На основу Закона о планирању и изградњи и
Статута Инжењерске коморе Србије

УПРАВНИ ОДБОР ИНЖЕЊЕРСКЕ КОМОРЕ СРБИЈЕ
утврђује да је

Зоран С. Живковић

дипломирани инжењер електротехнике
ЈМБ 1411952761548

одговорни извођач радова
електроенергетских инсталација ниског и средњег напона

Број лиценце
450 2547 03

У Београду,
13. новембра 2003. године

ПРЕДСЕДНИК КОМОРЕ
Милош Лазовић
Проф. др Милош Лазовић
дипл. грађ. инж.

STRABAG
STRABAG AG

Coat of arms

ENGINEERS CHAMBER OF SERBIA

LICENSE
OF A RESPONSIBLE CONTRACTOR

Pursuant to the Law on Planning and Construction and
Statute of the Engineers Chamber of Serbia

THE MANAGEMENT BOARD OF THE ENGINEERS CHAMBER OF SERBIA
establishes that

ZORAN S. ZIVKOVIC
a graduate electrical engineer
Personal identification number: 1411952761548

is a responsible Contractor
for low and medium electrical installations

License number:
450 2547 03

In Belgrade
November 13, 2003.

PRESIDENT OF THE CHAMBER
Prof. dr Milos Lazovic
(signed)
graduate civil engineer

Stamp: Republic of Serbia, Engineers Chamber of Serbia

I, Samanta Tošković, Interpreter/translator for English language, appointed in Montenegro by the Decision of the Minister of Justice number: 03-745-1567/17-1 of 18 April 2017, for the period of five years ,certify this is the true translation of the original document.
Podgorica,12.09.2017.

395

STRABAG
STRABAG AG

Resume of Proposed Personnel

Position *: Electrical Work Manager		
Personnel information	Name*: **Radomir Jović**	Date of Birth : **26.09.1956**
	Professional qualifications : Faculty of Electrical Engineering,Novi Sad,Dipl.ing.EE Licence of Contractor Engineer, Licence of Design Engineer, Licence of Engineer for Energy Efficiency, Licensing Exam for Fire Protection Tasks, Judical Expert for Installation Low and Middle Voltage,	
Present Employment	Name of Employer : **STRABAG** Address of Employer : **Antifašističke borbe 13 a, 11070 Belgrade , Serbia**	
	Telephone **+381 11 222 18 37**	Contact (manager / personnel officer) **Dragan PAVELIC**
	Fax **+381 11 222 18 40**	E-mail **radomir.jovic@strabag.com**
	Job **Electrical Work Manager**	Years with Present Employer: **6**

Summarize professional experience in reverse chronological order. Indicate particular technical and managerial experience relevant to the project.

From :*	*To* :*	*Company / Project / Position / Relevant technical and managerial experience **
2016	*2017*	STRABAG Construction of Shopping Mall Rajićeva/Responsible Contractor
2012	*2015*	STRABAG, Water Treatment Plant, Leskovac/ Responsible Contractor
2011	*2012*	STRABAG Car Seat Production Hall in Grosnica/ Responsible Contractor
2011	*2011*	Ministry of Defence, Projects for Ministry / Responsible Designer
2010	*2011*	MITELMONT d.o.o Business building „Smallville" in Kragujevac / Responsible Contractor2008
2008	*2009*	METALSISTEMI doo Electroinstalation Design / Responsible Designer
1989	*2008*	Tehnički Remontni zavod, Kragujevac Electro, Mechanical, water installation / Chief of Maintainance Department
1984	*1989*	ZASTAVA Projekt-Invest, Kragujevac Supervison over Constructing Buildings, Revision and Control of Technical Documents / Responisble Supervision Engineer
1981	*1984*	Cement factory: Maintainance of Electic Drive 0.4&6KV/ Supervision Engineer

STRABAG
STRABAG AG

ИНЖЕЊЕРСКА КОМОРА СРБИЈЕ

ЛИЦЕНЦА

ОДГОВОРНОГ ИЗВОЂАЧА РАДОВА

На основу Закона о планирању и изградњи и
Статута Инжењерске коморе Србије

УПРАВНИ ОДБОР ИНЖЕЊЕРСКЕ КОМОРЕ СРБИЈЕ
утврђује да је

Радомир М. Јовић

дипломирани инжењер електротехнике
ЈМБ 2609956780014

одговорни извођач радова
електроенергетских инсталација ниског и средњег напона

Број лиценце
450 E131 09

У Београду,
24. септембра 2009. године

ПРЕДСЕДНИК КОМОРЕ
Проф. др Драгослав Шумарац
дипл. грађ. инж.

397

STRABAG
STRABAG AG

Coat of arms

ENGINEERS CHAMBER OF SERBIA

LICENSE
OF A RESPONSIBLE CONTRACTOR

Pursuant to the Law on Planning and Construction and
Statute of the Engineers Chamber of Serbia

THE MANAGEMENT BOARD OF THE ENGINEERS CHAMBER OF SERBIA
establishes that

RADOMIR M. JOVIC
a graduate electrical engineer
Personal identification number: 2609956780014

is a responsible Contractor
for low and medium voltage electrical installations

License number:
450 E131 09

In Belgrade
September 24, 2009.

PRESIDENT OF THE CHAMBER
Prof. dr Dragoslav Sumarac
(signed)
graduate civil engineer

Stamp: Republic of Serbia, Engineers Chamber of Serbia

I, Samanta Tošković, Interpreter/translator for English language, appointed in Montenegro by the Decision of the Minister of Justice number: 03-745-1567/17-1 of 18 April 2017, for the period of five years ,certify this is the true translation of the original document. Podgorica,12.09.2017.

298

STRABAG
STRABAG A.G

ИНЖЕЊЕРСКА КОМОРА СРБИЈЕ

ЛИЦЕНЦА

ОДГОВОРНОГ ПРОЈЕКТАНТА

На основу Закона о планирању и изградњи и
Статута Инжењерске коморе Србије

УПРАВНИ ОДБОР ИНЖЕЊЕРСКЕ КОМОРЕ СРБИЈЕ
утврђује да је

Радомир М. Јовић

дипломирани инжењер електротехнике
ЈМБ 2609956780014

одговорни пројектант
електроенергетских инсталација ниског и средњег напона

Број лиценце
350 B038 05

У Београду,
10. фебруара 2005. године

ПРЕДСЕДНИК КОМОРЕ
Милан Вуковић
дипл. грађ. инж.

STRABAG

Resume of Proposed Personnel

The Tenderer shall provide all the information requested below for each of the personnel listed the schedule of the Contractor's Personnel. Fields with asterix (*) shall be used for evaluation.

In case of a JVCA the form shall be submitted for each partner of the JVCA.

Position* **Miner**		
Personnel information	Name * **Ivan Rakocevic**	Date of birth **07/01/1967.**
	Professional qualifications **licences 01-500/4;**	
Present employment	Name of Employer CRNAGORAPUT AD	
	Address of Employer **zetskih vladara bb, Podgorica Montenegro**	
	Telephone **+382(020)/448300**	Contact (manager / personnel officer) **Guenther Hartweger**
	Fax **+382(020)/448333**	E-mail **Ivan.rakocevic@crnagoraput.me**
	Job title **Miner**	Years with present Employer **1.5years**

Summarize professional experience in reverse chronological order. Indicate particular technical and managerial experience relevant to the project.

From*	To*	Company, Project, Position and Relevant Experience*
06/2016	present	CRNAGORAPUT AD, Reconstruction REGIONAL ROAD R-10 MOST-TRLICA SLIDE, Section CRKVICE – VRULJA/responsible engineer for mining work
5/2007	03/2011	RUDNICI BOKSITA AD NIKSIC /reconstruction of the tunnel "Vrmac"/shift engineer for mining work
02/2005	5/2007	RUDNICI BOKSITA AD NIKSIC /reconstruction of the tunnel "Vrmac"/shift engineer for mining work
01/2004	06/2004	RUDNICI BOKSITA AD NIKSIC /reconstruction of the tunnel "Vrmac"/shift engineer for mining work
02/2003	5/2003	RUDNICI BOKSITA AD NIKSIC /construction of the tunnel "Sopot 1"/shift engineer for mining work
10/2001	06/2003	RUDNICI BOKSITA AD NIKSIC/ construction of the tunnel "Sozina", shift engineer for mining work

STRABAG

06/2003	12/2003	RUDNICI BOKSITA AD NIKSIC/construction of the tunnel "Sopot 3" ON magistral road Risan Zabljak, shift engineer for mining work
06/2001	12/2002	RUDNICI BOKSITA AD NIKSIC/Rehabilitation and tunnel breakdown 7.8.9 –Road Podgorica –Kolasin / shift engineer
2000	2001	RUDNICI BOKSITA AD NIKSIC /construction of the tunnel "Sopot 5",/shift engineer for mining work

D.O.O. "VODOVOD I KANALIZACIJA" DANILOVGRAD

STRABAG

INŽENJERSKA KOMORA CRNE GORE
ENGINEERS CHAMBER OF MONTENEGRO

Broj:01-500/4
Podgorica, 11.04.2014. godine

Inženjerska komora Crne Gore, rješavajući po Zahtjevu mastera Ivana B. Rakočevića, dipl.inž. rudarstva iz Nikšića, za izdavanje licence odgovornog inženjera, na osnovu člana 134 Zakona o uređenju prostora i izgradnji objekata ("Sl. list CG", br.51/08, 34/11 i 35/13), člana 196 Zakona o opštem upravnom postupku ("Sl. list RCG", br. 60/03) i člana 1 Uredbe o povjeravanju dijela poslova Ministarstva održivog razvoja i turizma Inženjerskoj komori Crne Gore br. 08-1423 ("Sl. list CG" br. 32/13), donosi

Izdaje se

RJEŠENJE

LICENCA
odgovornog inženjera

Masteru IVANU B. RAKOČEVIĆU, dipl.inž. rudarstva iz Nikšića, za rukovođenje izvođenjem RUDARSKIH RADOVA.

OBRAZLOŽENJE

Zahtjevom br. 03-500/2 od 10.04.2014. godine, Inženjerskoj komori Crne Gore obratio se master Ivan B. Rakočević, dipl.inž. rudarstva iz Nikšića, za sticanje licence odgovornog inženjera.

U postupku utvrđivanja ispunjenosti uslova za sticanje licence odgovornog inženjera, shodno članu 107. stav 6. Zakona o uređenju prostora i izgradnji objekata („Sl. list CG", br. 51/08, 34/11 i 35/13) i člana 7. Pravilnika o načinu i postupku izdavanja i oduzimanja licence i načinu vođenja registra licenci ("Sl. list CG", br.68/08), Inženjerska komora Crne Gore utvrdila je:

- da posjeduje visoku stručnu spremu rudarske struke - master;
- da posjeduje Uvjerenje o položenom stručnom ispitu br. 01-3515/11 od 30.11.2010. god. izdato od Ministarstva ekonomije, Crne Gore;
- da je član Inženjerske komore Crne Gore;
- posjeduje odgovarajuće stručne reference od značaja za izvođenje radova, za koje se izdaje licenca.

Na osnovu izloženog, odlučeno je kao u dispozitivu ovog Rješenja.

Uputstvo o pravnom sredstvu: Protiv ovog rješenja može se izjaviti žalba Ministarstvu održivog razvoja i turizma u roku od 15 dana od dana prijema rješenja, preko Stručne službe Inženjerske komore Crne Gore

Službeno lice:
Mirjana Bučan, dipl. pravnik

Obradio
Miroslav Aksentijević, dipl. pravnik

Dostavljeno:
- Podnosiocu zahtjeva;
- U spise predmeta;
- Ministarstvu održivog razvoja i turizma;
- a/a

PREDSJEDNIK KOMORE
Prof. dr Branislav Glavatović, dipl.inž.geol.

402

VODOVOD I KANALIZACIJA DANILOVGRAD

STRABAG
STRABAG AG

Logo: IK

ENGINEERS CHAMBER OF MONTENEGRO

Logo: ECEC

Number: 01-500/4
Podgorica, 11.04.2014.

Engineers Chamber of Montenegro, proceeding upon the application of Ivan B. Rakocevic, Master of science, a graduate mining engineer, from Niksic, for issuing license for a responsible engineer, pursuant to Article 134 of the Law on Spatial Planning and Construction of Structures ("Official Gazette of Montenegro", number 51/08, 34/11 and 35/13), Article 196 of the Law on General Administrative Procedure ("Official Gazette of the Republic of Montenegro", number 60/03) and Article 1 of the Decree on the Delegating of a Part of Affairs of the Ministry of Sustainable Development and Tourism to the Engineers Chamber of Montenegro No. 08-1423 ("Official Gazette of Montenegro", number 32/13), hereby makes the

To issue the

DECISION

LICENSE
of a responsible engineer

to Ivan B. Rakocevic, master of science, a graduate mining engineer from Nikisc, for managing the execution of mining works.

EXPLANATION

Ivan B. Rakocevic, Master of Science, a graduate mining engineer, from Niksic addressed to the Engineers Chamber of Montenegro, by the application number 03-500/2 of 10.04.2014 for obtaining the license of a responsible engineer. In the procedure of identifying the fulfillment of the requirements for obtaining the license of a responsible engineer, pursuant to Article 107 paragraph 6 of the Law on Spatial Planning and Construction of Structures ("Official Gazette of Montenegro", number 51/08, 34/11 and 35/13) and Article 7 of the Rulebook on the Manner and Procedure of License Issuance and Revocation and the Manner of License Register Maintenance ("Official Gazette of Montenegro", number 68/08), the following was established:

- That the applicant has higher professional qualifications of mining profession-master of science
- That he owns the Certificate on Passed Professional Exam no. 01-3515/11 as of 30 November 2010 issued by the Ministry of Economy of Montenegro;
- That he is a member of the Engineers Chamber of Montenegro
- That he has appropriate professional references of relevance for the execution of work for which the license is issued

On basis of the above said, it has been decided the same as in the enacting clause of this decision.

Instructions on the legal remedy: An appeal against the Decision hereof may be lodged to the Ministry of Sustainable Development and Tourism, within 15 days following the receipt of the Decision hereof, via the Expert Service of the Engineers Chamber of Montenegro.

CHAMBER'S PRESIDENT
Branislav Glavatovic, Ph.D, graduate geological engineer
(signature supplied)

Official person:
Mirjana Bucan, law graduate
(signature supplied)

Done by
Miroslav Aksentijevic, law graduate
(signature supplied)

To be submitted to:
- the Applicant
- the case files
- the Ministry of Sustainable Development and Tourism
- a/a

(Stamp supplied: ENGINEERS CHAMBER OF MONTENEGRO, PODGORICA, MONTENEGRO)

I, Samanta Tošković, Interpreter/translator for English language, appointed in Montenegro by the Decision of the Minister of Justice number: 03-745-1567/17-1 of 18 April 2017, for the period of five years ,certify this is the true translation of the original document.
Podgorica,12.09.2017.

403

STRABAG
STRABAG AG

INŽENJERSKA KOMORA CRNE GORE

Broj: 02-1521

Podgorica, 27.03.2017. god.

Na osnovu člana 140 stav 1 tačka 1 Zakona o uređenju prostora i izgradnji objekata
(„Sl. list CG", br. 51/08, 34/11, 35/13 i 33/14),
i evidencije Registra članova Inženjerske komore Crne Gore,
a na lični zahtjev člana Komore, izdaje se

POTVRDA

o članstvu u Inženjerskoj komori Crne Gore

Master IVAN B. RAKOČEVIĆ, diplomirani inženjer rudarstva iz Nikšića,
član Inženjerske komore Crne Gore do **10.04.2018.** godine.

Obradila:

Aleksandra Gvozdenović,dipl. ing. metalurgije

Generalni sekretar

Svetislav Popović, dipl. pravnik

404

STRABAG
STRABAG AG

ENGINEERS CHAMBER OF MONTENEGRO

Number: 02-1521

Podgorica, 27/03/2017

Pursuant to Article 140 paragraph 1 item 1 of the Law on Spatial Planning and Construction of Facilities ("Official Gazette of Montenegro", No. 51/08, 34/11, 35/13 and 33/14) and according to the records of the Register of Members of the Engineers Chamber of Montenegro and upon personal request of the Chamber's member, it is hereby issued

C E R T I F I C A T E

On Membership in the Engineers Chamber of Montenegro

That **IVAN B. RAKOCEVIC**, Master of Science, graduate mining engineer from Niksic is a member of the Engineers Chamber of Montenegro until **10 April 2018.**

Done by
Aleksandra Gvozdenovic,
Graduate Metallurgical Engineer
(Signature provided)

SECRETARY GENERAL
Svetislav Popovic, law graduate
(Signature provided)

(Round stamp provided: ENGINEERS CHAMBER OF MONTENEGRO, PODGORICA, MONTENEGRO)

I, Samanta Tošković, Interpreter/translator for English language, appointed in Montenegro by the Decision of the Minister of Justice number: 03-745-1567/17-1 of 18 April 2017, for the period of five years ,certify this is the true translation of the original document.

Podgorica,12.09.2017.

465

STRABAG

VOLUME 1

SECTION 4

FORM 4.6.1.3

PROFESSIONAL EXPERIENCE OF KEY STAFF

CURRICULUM VITAE

(Maximum 3 pages + 3 pages of annexes)

Proposed position in the contract: **Geotechnical Engineer**

1. Surname: **Vučeljić**
2. Name: **Aleksandar**
3. Date and place of birth: **11.09.1968**
4. Nationality: **Serbian**
5. Civil status: **married**

   Address (phone/fax/e-mail): **aleksandar.vuceljic@tpaqi.com**
6. Education:

Institutions:	*Faculty of Mining and Geology in Belgrade, Department of geological study program - geotechnics*
Date:	
From (month/year)	*09/1987*
To (month/year)	*07/1994*
Degree or qualification:	*B.S.Geo.*

7. Language skills

Indicate on a scale of 1 to 5 (1 — excellent; 5 — basic):

Language	*Level*	*Passive*	*Spoken*	*Written*
Serbian	*Mother tongue*			
English			*2*	*2*

8. Membership of professional bodies:
9. Other skills (e.g. computer literacy): computer literacy
10. Current position: **STRABAG TPA Manager for Serbia**
11. Years of professional experience: **22**
12. Key qualifications:
13. Specific experience in non-industrialised countries: **none**
14. Professional experience:

Date: from (month/year) to (month/year)	*2006 – present*
Place	Belgrade, Serbia
Company/organisation	TPA-STRABAG
Position	Laboratory Manager

STRABAG
STRABAG AG

Job description	Laboratory and quality management, quality assurance monitoring and controlling Projects: Road M25 Kladovo-Negotin-Zaječar Extension of regional road M5 Paraćin Zaječar Regional road R243 Stara Planina LOT 3 – Rehabilitation of ring road R-251 /10.5mil.eur
Date: from (month/year) to (month/year)	2001 - 2006
Place	Čačak, Serbia
Company/organisation	AD Putevi Čačak
Position	Quality and Laboratory Manager
Job description	Quality management for many projects, quality assurance – monitoring and control, Construction site control/inspection
Date: from (month/year) to (month/year)	1995 - 2001
Place	Beograd, Serbia
Company/organisation	Highway Institute
Position	Engineer
Job description	Construction site control

15. Others:
15a. Publications and seminars:
15b. References:

Signature .....

(person(s) authorised to sign on behalf of the tenderer)

15 January 2016
Aleksandar_Vuceljic_en_24.06.2016

STRABAG
STRABAG AG

Resume of Proposed Personnel

The Tenderer shall provide all the information requested below for each of the personnel listed the schedule of the Contractor's Personnel. Fields with asterix (*) shall be used for evaluation.

In case of a JVCA the form shall be submitted for each partner of the JVCA.

Position*: Designer of Water Supply / FS		
Personnel information	Name *: Milan Ivetic	Date of birth: 02.08.1954.
	Professional qualifications: M.Sc. degree, Sanitary Engineering	
Present employment	Name of Employer: IWA Consalt d.o.o	
	Address of Employer: Anastasa Jovanovica 3, Belgrade	
	Telephone: +381 62 804 45 22	Contact (manager / personnel officer): Milan Ivetic
	Fax	E-mail: mivetic@iwa-cons.com
	Job title: Owner / General Manager, Project Manager	Years with present Employer: 17 years

Summarize professional experience in reverse chronological order. Indicate particular technical and managerial experience relevant to the project.

From*	To*	Company, Project, Position and Relevant Experience*
2013	*2017*	*IWA Consalt, Tender documents preparation according to Fidic RB and YB in Republika Srpska, Hydraulic Expert*
2016	*2016*	*IWA Consalt, Conceptual Design of WWTP Vranje, Leading Designer*
2016	*2016*	*IWA Consalt, Conceptual Design of WWTP Krusevac, Leading Designer*
2015	*2016*	*Ludwig Pfeiffer, Preliminary and Detailed Design of Main city collector in municipality Bijelo Polje – Phase 1, Leading Designer, Montenegro,*
2012	*2016*	*IWA Consalt, Preliminary, Detail design and As built design for WWTP Sabac for 84.000 PE. WWTP consists of Raw water PS with coarse and fine screens, Storm water compensation tanks, Grit chambers, Primary sedimentation tanks, Aeration tanks, Final sedimentation tanks, Outlet PS, Excess and recycling sludge PS, Sludge thickening, Sludge storage and Sludge dewatering, regulation measures of right embankment of Sava river and dykes and retention walls along "Cer" drainage channel (FIDIC YB),WWTP Sabac; 84 000 ES, Project Manager , Serbia*

STRABAG
STRABAG AG

2011	*2015*	*IWA Consalt, Preliminary and Detail design for WWTP Leskovac for 90.000 PE. WWTP consists of Raw water PS with coarse and fine screens, Storm water compensation tanks, Grit chambers, Primary sedimentation tanks, Aeration tanks, Final sedimentation tanks, Outlet PS, Excess and recycling sludge PS, Sludge thickening, Sludge storage and Sludge dewatering, flood protective dykes from Veternica and South Morava river (FIDIC YB,), Project Manager, Serbia*
2011	*2011*	*IWA Consalt, Preliminary Design for the Wastewater Treatment Plant town of Loznica. Hydraulic capacity Q=500 l/s, PE 80.000. Preparation of Tender documents (FIDIC YB), Project Manager, Serbia*
2009	*2010*	*IWA Consalt, Preparation of civil, structural and mechanical parts of the Preliminary and Detailed Design for the reconstruction of the central pumping station (Q=500 l/s) and 8 km main delivery pipeline for the City of Loznica (population 43000). Preparation of Tender documents (FIDIC RB), Project Manager.*

409

STRABAG
STRABAG AG

INŽENJERSKA KOMORA CRNE GORE
ENGINEERS CHAMBER OF MONTENEGRO

Broj: 01-791/2
Podgorica, 10.07.2015. godine

Inženjerska komora Crne Gore, rješavajući po Zahtjevu Milana V. Ivetića, dipl.inž.građ., iz Beograda Republika Srbija, za ovjeru licence odgovornog projektanta, na osnovu člana 136 Zakona o uređenju prostora i izgradnji objekata ("Sl. list CG", br.51/08, 34/11, 35/13, 33/14), Pravilnika o uslovima i načinu ovjeravanja i poništavanja ovjere licence stranog lica ("Sl. list CG", br. 68/08, 33/11, 46/14), člana 196 Zakona o opštem upravnom postupku ("Sl. list RCG", br. 60/03, 32/11) i člana 1 Uredbe o izmjeni Uredbe o povjeravanju dijela poslova Ministarstva održivog razvoja i turizma, Inženjerskoj komori Crne Gore, br 08-1375 ("Sl. list CG", br. 35/15), donosi

Ovjerava se

R J E Š E N J E

L I C E N C A
odgovornog projektanta

BROJ: 314 0289 03, izdata od Inženjerske komore Srbije, Republika Srbija, **MILANU V. IVETIĆU dipl.inž.građ.,** iz Beograda, Republika Srbija, ZA IZRADU GRAĐEVINSKIH PROJEKATA ZA OBJEKTE HIDROTEHNIKE I INSTALACIJA VODOVODA I KANALIZACIJE.

O B R A Z L O Ž E N J E

Zahtjevom br. 03-791 od 09.07.2015. godine, Inženjerskoj komori Crne Gore obratio se Milan V. Ivetić, dipl.inž.građ., iz Beograda, Republika Srbija, za ovjeru licence odgovornog projektanta.U postupku utvrđivanja ispunjenosti uslova za ovjeru licence odgovornog projektanta, shodno Zakonu o uređenju prostora i izgradnji objekata („Sl.list CG", br. 51/08, 34/11, 35/13, 33/14) i shodno Pravilniku o uslovima i načinu ovjeravanja i poništavanja ovjere licence stranog lica ("Sl. list CG", br. 68/08, 33/11, 46/14), utvrđeno je da je podnosilac zahtjeva dostavio:

- ovjerenu fotokopiju pasoša ;
- ovjerenu fotokopiju licence broj: 314 0289 03 od 31.07.2003.god., izdatu od Inženjerske komore Republike Srbije;
- ovjerenu fotokopiju diplome o stručnoj spremi – dipl.inž.građ.;
- potvrdu o članstvu u Inženjerskoj komori Crne Gore.

Na osnovu izloženog, odlučeno je kao u dispozitivu ovog Rješenja.

Uputstvo o pravnom sredstvu: Protiv ovog rješenja može se izjaviti žalba Ministarstvu održivog razvoja i turizma u roku od 15 dana od dana prijema rješenja, preko Stručne službe Inženjerske komore Crne Gore.

Generalni sekretar:
Svetislav Popović, dipl. pravnik

Službeno lice:
Mirjana Bučan, dipl. pravnik

Dostavljeno:
- Podnosiocu zahtjeva;
- U spise predmeta;
- Ministarstvu održivog razvoja i turizma;
- a/a

PREDSJEDNIK KOMORE
Prof. dr Branislav Glavatović, dipl.inž.geol.

410

STRABAG
STRABAG AG

Logo: IK

ENGINEERS CHAMBER OF MONTENEGRO

Logo: ECEC

Number: 01-791/2
Podgorica, 10.07.2015.

Engineers Chamber of Montenegro, proceeding upon the application of Milan V. Ivetic, a graduate civil engineer, from Belgrade, Republic of Serbia for certification of the license of a responsible designer, pursuant to Article 136 of the Law on Spatial Planning and Construction of Structures ("Official Gazette of Montenegro", number 51/08, 34/11, 35/13, 33/14), Rulebook on Conditions and the Manner of Certification and Revocation of the Certification of the License of the Foreign Person ("Official Gazette of Montenegro", no. 68/08, 33/11, 46/14), Article 196 of the Law on General Administrative Procedure ("Official Gazette of the Republic of Montenegro", number 60/03, 32/11) and Article 1 of the of the Decree on the Delegating of a Part of Affairs of the Ministry of Sustainable Development and Tourism to the Engineers Chamber of Montenegro No. 08-1375 ("Official Gazette of Montenegro" No. 35/15), hereby issues the

It is hereby certified

DECISION

LICENSE
of a responsible designer

NUMBER 314 0289 03, issued by Engineers Chamber of Serbia, Republic of Serbia to MILAN V. IVETIC, a graduate civil engineer from Belgrade, Republic of Serbia, for developing of construction projects for structures of hydraulics and installations of water supply system and sewerage.

EXPLANATION

Milan V. Ivetic, a graduate civil engineer from Belgrade, Republic of Serbia addressed to the Engineers Chamber of Montenegro, by the Application number 03-791 of 09.07.2015 for certifying the license of the responsible designer. In the procedure of identifying the fulfillment of the requirements for certifying the license of the responsible designer, pursuant to the Law on Spatial Planning and Construction of Structures ("Official Gazette of Montenegro", number 51/08, 34/11, 35/13, 33/14) and in accordance with the Rulebook on Conditions and the Manner of Certification and Revocation of the Certification of the License of the Foreign Person ("Official Gazette of Montenegro", number 68/08, 33/11, 46/14), it was found that the applicant submitted the following:

- Certified photocopy of the passport;
- Certified photocopy of the license number 314 0289 03 as of 31 July 2003 issued by the Engineers Chamber of the Republic of Serbia;
- Certified photocopy of diploma on professional qualification- graduate civil engineer;
- Certificate on membership in Engineers Chamber of Montenegro.

On basis of the above said, it has been decided the same as in the enacting clause of this decision.

Instructions on the legal remedy: An appeal against the Decision hereof may be lodged to the Ministry of Sustainable Development and Tourism, within 15 days following the receipt of the Decision hereof, via the Expert Service of the Engineers Chamber of Montenegro.

Secretary General
Svetislav Popovic, law graduate
(signature supplied)
Official person:
Mirjana Bucan, law graduate
(signature supplied)

CHAMBER'S PRESIDENT
Branislav Glavatovic, Ph.D, graduate geological engineer
(signature supplied)

To be submitted to:
- the Applicant
- the case files
- the Ministry of Sustainable Development and Tourism
- a/a

(Stamp supplied: ENGINEERS CHAMBER OF MONTENEGRO, PODGORICA, MONTENEGRO)

I, Samanta Tošković, Interpreter/translator for English language, appointed in Montenegro by the Decision of the Minister of Justice number: 03-745-1567/17-1 of 18 April 2017, for the period of five years ,certify this is the true translation of the original document.
Podgorica,12.09.2017.

411

STRABAG
STRABAG AG

ATTACHMENT 3 - OTHER INFORMATION

i) LIST OF PROPOSED SUBCONTRACTORS

Where the Tenderer proposes to use a named subcontractor (s) for the execution of any part of the Works, the Tenderer shall provide the following information for each proposed Subcontractor:

- name, head office address; place of incorporation / registration; year of incorporation / registration and contact details;
- brief description and the estimated value of the part of the Works, which is intended to be subcontracted;
- description of the capability and resources of the named subcontractor (s) to perform the proposed part of the Works including:

  (a) experience and past performance on the execution of similar works;
  (b) capabilities with respect to personnel, equipment, and construction; and
  (c) financial position

- appropriate justification of the need for the use of the proposed subcontractor for the execution of the Works

In case of a JVCA the form shall be submitted only once for the whole JVCA (not for each partners of the JVCA).

Name of Subcontractor	Description of works to be carried out	Estimated value in EURO	% of Accepted Contract Amount
Total value / %		**fill in value**	*** fill in total %**

* max. 30% of the Accepted Contract Amount

i) LIST OF PROPOSED SUBCONTRACTORS

Where the Tenderer proposes to use a named subcontractor (s) for the execution of any part of the Works, the Tenderer shall provide the following information for each proposed Subcontractor:

- name, head office address; place of incorporation / registration; year of incorporation / registration and contact details;
- brief description and the estimated value of the part of the Works, which is intended to be subcontracted;
- description of the capability and resources of the named subcontractor (s) to perform the proposed part of the Works including:

  (a) experience and past performance on the execution of similar works;
  (b) capabilities with respect to personnel, equipment, and construction; and
  (c) financial position

- appropriate justification of the need for the use of the proposed subcontractor for the execution of the Works

In case of a JVCA the form shall be submitted only once for the whole JVCA (not for each partners of the JVCA).

Name of Subcontractor	Description of works to be carried out	Estimated value in EURO	% of Accepted Contract Amount
IWA Consalt d.o.o, Anastasa Jovanovica 3, Belgrade, Serbia. Place and year of registration: Belgrade, 1999. Contact:Milan Ivetic, mivetic@iwa-cons.com, +381 62 804 45 22	Preparing required design documentation.		
Total value / %		**fill in value**	*** fill in total %**

* max. 30% of the Accepted Contract Amount

STRABAG
STRABAG AG

ii) DETAILS OF PROPOSED INSURER (S)

The Tenderer shall provide name (s) and address (s) the insurer (s) and its/their principal terms for the insurances required under the Contract and described in Volume II. (Contract), Appendix 3. (Insurance Requirements).

STRABAG AG

Ortenburgerstraße 27
A-9800 Spittal/Drau, Austria

Telefon +43(0) / 4762-620-0
Telefax +43(0) / 4762-4962
www.strabag.com

STRABAG

D.O.O. "Vodovod i kanalizacija" Danilovgrad
Caja Scepanovica bb Danilovgrad
81410 State of Montenegro

Project: **REHABILITATION OF EXISTING AND CONSTRUCTION OF NEW SEWERS;**
Tender No: EBRD ME DAN 9000
Procurement ref: 8733-IFT-41252

In case that STRABAG AG is awarded the Contract for the works on **REHABILITATION OF EXISTING AND CONSTRUCTION OF NEW SEWERS;**
Tender No: EBRD ME DAN 9000
the following Insurance company will be chosen as Insurer for a.m. works.

Data about Insurer

- **Generali**
  Str. Kralja Nikole 27a/VII, 81000 Podgorica, Montenegro

  or

- **LOVCEN INSURANCE INC. Podgorica**
  Str. Slobode 13 A, 81000 Podgorica, Montenegro

Best regards,

.....

Zeljko Lekovic
Authorized Representative

11/9/2017

D.O.O. VODOVOD I KANALIZACIJA DANILOVGRAD

416

STRABAG

Generali osiguranje Montenegro AD Podgorica
Kralja Nikole 27a / VI
81000 Podgorica / Crna Gora
T +382.20.444.800
F +382.20.444.810
generali@generali.me
generali.me

POLISA
OSIGURANJE OD ODGOVORNOSTI

No: 7756210

Preuzimač: Gordana Stojadinovic
Zamjena polise b 7755034
Zamjena LP br:

Ugovornik osiguranja: STRABAG DOO PODGORICA
ul.Zetskih vladara br.5
Osiguranik PODGORICA
CRNAGORAPUT AD 02713403
ul.Zetskih vladara br.5
STRABAG DOO PODGORICA PODGORICA
ul.Zetskih vladara br.5
STRABAG AG AUSTRIA GLAVNA PODRUŽNICA U PODGORICI PODGORICA
ZETSKIH VLADARA 5 02713403

Ugovor o osiguranju: sa jednogodišnjim rokom trajanja, od 01.01.2017 do 01.01.2018

Uslovi osiguranja:
Opšti uslovi osiguranja imovine. Uslovi za osiguranje opšte odgovornosti. Uslovi za osiguranje odgovornosti za proizvode.

Osigurava se:
Odgovornost iz delatnosti. Odgovornost za proizvode. .

Osigurana aktivnost: prema prilogu polise
Limit pokrića:
5,000,000.00 **po štetnom događaju**
15,000,000.00 **za period trajanja osiguranja**

Teritorijalno pokriće: Ceo svet osim USA i CA
Učešće osiguranika u štetnom događaju: 0 %, min 20,000.00

Napomena:
Maksimalna obaveza osiguravača je definisana limitom po štetnom događaju i brojem agregata za period trajanja osiguranja. Za prošireno pokriće definisani su posebni limiti. Osiguranik učestvuje u svakom štetnom događaju.Sastavni dio polise je prilog sa obračunom premije.Sume osiguranja i premija dati su u EUR.Premijska stopa je iskazana u prilogu koji čini sastavni dio polise. Osiguravač zadržava pravo ispravke računskih grešaka.Osiguranje počinje u 00.00h 01.01.2017 godine i traje do 00.00h 01.01.2018 godine.Polisa je sastavni dio International Liability Programm in Austria Generali Versicherung AG 1010 Wien , Landskrongrasse 1-3

Period trajanja osiguranja: 01.01.2017 do 01.01.2018

Potpisom polise ugovarač/osiguranik potvrđuje da je primio uslove zaključenog osiguranja

OSIGURAVAČ: M.P. **UGOVORNIK:**

417

STRABAG
STRABAG AG

OSIGURANJE OD ODGOVORNOSTI

Obračun premije osiguranja:

Ukupne godišnje bruto zarade:	0.00
Ukupan prihod:	0.00
Prosječna neto mesečna zarada:	

Klazule

Naziv	Limit	Franšiza
Premijska stopa: 0.0000		

Godišnja premija:	
Premija za period trajanja osiguranja:	3,843.83 EUR
Porez	3,843.83 EUR
Premija sa porezom	345.94
Plaćanje premije: u celosti	4,189.77
Podgorica filijala 25.01.2017	

Potpisom police ugovarač/osiguranik potvrđuje da je primio uslove zaključenog osiguranja

OSIGURAVAČ: M.P. **UGOVORNIK:**

STRABAG
STRABAG AG

Generali osiguranje Montenegro AD Podgorica
Kralja Nikóle 27a / VI
81000 Podgorica / Crna Gora
T +382.20.444.800
F +382.20.444.810
generali@generali.me
generali.me

Third Party Liability Insurance Policy
No 7756210

Insurer	**Generali Osiguranje Montenegro AD** Kralja Nikole 27A/VI Podgorica, Crna Gora
Insured	**STRABAG D.O.O.,** Ulica Zetskih vladara br. 5, ME 20000 Podgorica
Additional insured	**CRNAGORAPUT AD,** Ulica Zetskih vladara br. 5 , ME 20000 Podgorica **STRABAG AG** Austria Glavna podružnica u Podgorici , Ulica Zetskih vladara br. 5, ME 20000 Podgorica
Scope of cover	General Third Party Liability Product Liability
Period of insurance	From hrs 00.00 Local Standard Time of 01/01/17 to hrs 00.00 Local Standard Time of 01/01/18
Territorial scope of cover	Worldwide, exclusive to USA/Canada

Situation

Insured sum: € 5,000,000.00

STRABAG D.O.O., Ulica Zetskih vladara 5, ME 20000 Podgorica

	Turnover	Rate	Annual premium
General Construction			
Total			**€ 1,758.83**

CRNAGORAPUT AD, Ulica Zetskih vladara 5, ME 20000 Podgorica

	Turnover	Rate	Annual premium
General Construction			
Asphalt and Bitumen			
Quarry			
Total			**€ 2,085.00**

STRABAG AG Austria Glavna podružnica u Podgorici ,
Ulica Zetskih vladara 5, ME 20000 Podgorica

	Turnover	Rate	Annual premium
Comment			
Total			**€ 0.00**
TOTAL	**€ 0.00**		**€ 3,843.83**

Limit(s) € 5,000,000.00 per occurrence, to pay in excess of applicable Deductibles , if any, and limited by sub-limits as specified 3 times in the annual aggregate

419

STRABAG
STRABAG AG

Generali osiguranje Montenegro AD Podgorica
Kralja Nikole 27a / VI
81000 Podgorica / Crna Gora
T +382.20.444.800
F +382.20.444.810
generali@generali.me
generali.me

Sub-limit(s) Limit Category	Aggregate	Limit
Contractual liability TPL	each and every loss	€ 5,000,000.00
Cross liability TPL	each and every loss	€ 5,000,000.00
Custody of movable goods TPL	each and every loss	€ 5,000,000.00
Damage to work in progress on immovable objects TPL	each and every loss	€ 5,000,000.00
Enviromental impairment liabillty according EU-Directive204/35-EG TPL	each and every loss	€ 5,000,000.00
Gradual damages TPL	each and every loss	€ 5,000,000.00
Loading and unloading damages TPL	each and every loss	€ 5,000,000.00
Parked vehicles of employees and visitors TPL	each and every loss	€ 5,000,000.00
Profesional idemnity TPL	each and every loss	€ 5,000,000.00
Pure financial losses TPL	each and every loss	€ 5,000,000.00
Sudden and accidential pollution TPL	each and every loss	€ 5,000,000.00

Deductible(s) Limit Category	Ded. %	Min. Ded.	Max. Ded.	Fix. Ded.
General TPL				€ 20,000.00

Terms and conditions General Third Party Liability Insurance Conditions and Product Liability Insurance Conditions of Generali Insurance Montenegro

Exclusions **Principal Polisy Exclusion**
In accordance to conditions above

Turnover **€ 0.00**

Annual Premium **€ 3,843.83**

Trigger **Loss occurance**

Insurer: **Insured:**

STRABAG
STRABAG AG

"Lovćen" Osiguranje A.D. Podgorica

ALL RISK INSURANCE POLICY

INSURED/ OSIGURANIK: Crnagoraput AD, Podgorica
UL Zetskih Vladara 5
81000 Podgorica

Policy No. / Polisa br.: 0574588

ADDITIONAL INSURED: STRABAG AG Austria, Glavna Podružnica u Podgorici
Zetskih Vladara BR.5
81000 Podgorica, Montenegro

STRABAG d.o.o
Zetskih Vladara 5
81000 Podgorica, Montenegro

INSURED LOCATIONS/ OSIGURANE LOKACIJE:

Insurance cover is provided outside of the designated insured locations for construction and assembly areas of the re- companies in Montenegro (Whole country) /Osiguravajuće pokriće je takođe obezbjeđeno izvan predviđenih osiguranih cij za konstrukciju i montažu a koje su u vlasništvu osiguranih kompanija u Crnoj Gori (Cijela zemlja).

COVERAGE/POKRIĆE: Property damage (PD) on All Risk Basis/ Oštećenje imovine po All Risk

CONDITIONS/ USLOVI:

General Conditions of Industrial All Risk-Section 1-Material Damage (US-kpz-ind/06-7-en)
Opšti uslovi za osiguranje privrednih društava-Section 1-Oštećenje imovine (US-kpz-ind/06-7-en)
Terrorism Exclusion Clause (KL-ZA-teror/08-07-cg) / Klauzula o isključenju terorističkih djelovanja (KL-ZA-teror/08-07-cg)
Special Contitions for Earthquake insurance(US-ZP-ptr/15-03-cg)/
Posebni uslovi za osiguranje od opasnosti zemljotresa(US-ZP-ptr/15-03-cg)

POLICY PERIOD/ PERIOD OSIGURANJA: 01.01.2017 - 31.12.2017 (both days included / oba dana uključena)

MAIN EXCLUSIONS/ GLAVNA ISKLJUČENJA:

War, Civil War, Warlike Action, Nuclear Hazards, Loss of Data, Faulty Design, Wear and Tear, Gross Negligence Rust and Corrosion, Dishonest Acts, Disappearence, Collapse, Cyber, Fungus, Mine Subsidence
Watercraft, Aircraft, crops, Animals, Land, Off Shore equipment, Pipelines, Nuclear Plants, Data of Information, /
Rat, Civilni rat, Ratna akcija, Nuklearna opasnost, Gubitak podataka, Neispravan dizajn, Habanje, Rđa i korozija uled nepažnje, krivičnih djela, Nestanak, Kolaps, Gljive, Slijeganje tla.
Plovni objekti, Avioni, Usjevi, Životinje, Zemljište, Off Shore oprema, Cjevovodi, Nuklearne elektrane, Podaci i informacije

SANCTION LIMITATION AND EXCLUSION CLAUSE:

Montenegro – Lovcen shall not be deemed to provide cover and shall not be liable to pay any claimor provide any benefit hereunder to the extend that the provision of such cover, payment or such claim or provision of such benefit would expose Monetenegro – Lovcen to any sanction, prohibition or restriction under United nations resolutions or trade or economic sanctions, laws or regulations of the European Union, one of ils member states, Montenegro.

SUM INSURED/ SUMA OSIGURANJA:

TOTAL SUM INSURED / UKUPNA SUMA OSIGURANJA: **EUR 5.876.562**

Provided Insured values for total sums insured are tangible assets and stock and only for premium splitting purposes.

Buildings, Equipment, Stocks/Zgrade EUR 5.876.562
TOTAL PROPERTY DAMAGE/ UKUPNO ZA IMOVINU: **EUR 5.876.562**

REIMBURSEMENT/ NAKNADA: Reinstatement value / Povrat vrijednosti

D.O.O. "VODOVOD I KANALIZACIJA" VIK

STRABAG
STRABAG AG

GENERAL LIMIT: EUR 60 000 000 (FLExA)

	Material Damage Sub Limits					
Excl.	Coverage / Peril	Currency Loss Limit and Currency Deductible / Line of Business for Limit	Loss Limit Amount per Occurrence	Loss Limit Annual Aggregate	Deductible Amount	Deductible combined
No	FLExA/	EUR / PD	60.000.000	Not Applicable	50.000	No
No	Earthquake	EUR / PD	10.000.000	10.000.000	50.000	No
No	Volcanic Eruption	EUR / PD	10.000.000	10.000.000	50.000	No
No	Windstorm	EUR / PD	10.000.000	10.000.000	50.000	No
No	Hail	EUR / PD	10.000.000	10.000.000	50.000	No
No	Flood	EUR / PD	10.000.000	10.000.000	50.000	No
Yes	Stormflood					No
No	Sprinkler leakage	EUR / PD	TSI	TSI	50.000	No
No	Burst pipes	EUR / PD	TSI	TSI	50.000	No
No	Strike, riot, civil commotion	EUR / PD	25.000.000	25.000.000	50.000	No
No	Impact of vehicles, smoke and sonic boom	EUR / PD	TSI	TSI	50.000	No
Yes	Terorrism					No
No	Subsidence landslide	EUR / PD	10.000.000	10.000.000	50.000	No
No	Avalanche and snow pressure	EUR / PD	10.000.000	10.000.000	50.000	No
No	Burglary	EUR / PD	10.000.000	Not Applicable	50.000	No
No	Robbery	EUR / PD	10.000.000	Not Applicable	500	No
No	Money	EUR / PD	25.000	Not Applicable	1.000	No
No	Buildings under construction	EUR / PD	10.000.000	25.000.000	100.000	No
No	Unnamed perils	EUR / PD	10.000.000	Not Applicable	50.000	No

Deductible applied within policy limit
Deductible EUR 30.000 (FLExA) for asphalting plants.

PREMIUM/ PREMIJA:	EUR	4 637,00
INSURANCE TAX / POREZ OSIGURANJA :	EUR	417,33
TOTAL ANNUAL PREMIUM/ UKUPNA GODISNJA PREMIJA:	EUR	5.054,33

Podgorica 31.01.2017

Insurer/Osiguranik
"Lovćen" Osiguranje Podgorica

Insurer/Osiguranik
Crnogoraput AD

STRABAG
STRABAG AG

iii) DETAILS OF PROPOSED BANK ISSUING PERFORMANCE SECURITY

The Tenderer shall provide the name and the address of the issuing bank, which will provide the Performance Security. The Tenderer shall also provide information about the current credit rating of the issuing bank by Moodys or Standard & Poors or other rating agencies.

STRABAG AG

Ortenburgerstraße 27
A-9800 Spittal/Drau, Austria

Telefon +43(0) / 4762-620-0
Telefax +43(0) / 4762-4962
www.strabag.com

D.O.O. "Vodovod i kanalizacija" Danilovgrad
Caja Scepanovica bb Danilovgrad
81410 State of Montenegro

Project: **REHABILITATION OF EXISTING AND CONSTRUCTION OF NEW SEWERS;**
Tender No: EBRD ME DAN 9000
Procurement ref: 8733-IFT-41252

In case that STRABAG AG is awarded the Contract for the works on **REHABILITATION OF EXISTING AND CONSTRUCTION OF NEW SEWERS,** the following Bank will provide the Performance Security for a.m. works

Data

Raiffeisen Bank International AG, Am Stadtpark 9, A-1030 Vienna, Austria

or

UniCredit Bank Austria AG, Schottengasse 6-8, A-1010 Vienna, Austria

or

ERSTE Group Bank AG, Graben 21, A-1010 Vienna, Austria

Best regards,

.....

Željko Lekovic
Authorized Representative

11/9/2017

Bank Austria Member of UniCredit

Private Customers | Corporate Customers | Private Banking | About Us

- UniCredit
- Bank Austria
- The Unicredit banking network in CEE
- Publications
- Art & Culture
- Sustainability
- UEFA Champions League
- **Investor Relations**
  - › Ad-hoc / IR Releases
  - › Financial Reports
  - › Disclosure according to Basel 2 and 3 (CRR)
  - ˅ Ratings
  - › Information on Bonds
  - › Corporate Governance
- Press

Ratings of UniCredit Bank Austria AG

	Moody's	Standard & Poor's	Fitch Ratings
Long-term	Baa1	BBB	BBB+
Outlook	Stable	Negative	Negative
Short-term	P-2	A-2	F2
Public-Sector Covered Bonds	Aaa	—	—
Mortgage Covered Bonds	Aaa	—	—

*) Securities issued before 31 Dec. 2001 which benefit from a secondary liability by the City of Vienna (grandfathered debt) are also rated as shown above by Standard & Poor's, while by Moody's the corresponding senior securities are rated A2 and the subordinated ones are rated Baa2

Raiffeisen Bank International

About us | Customer Relations | Products | Investors | Media | Research | Career | RBG Central Institute

› Homepage › Investors › Ratings

- News
- RBI Share
- Reports
- Presentations & Webcasts
- Financial calendar
- Information for Debt Investors
- Corporate Governance
- Events

Ratings

RBI is rated by the leading independent rating agencies. The following ratings are shown below.

Ratings	Moody's	Standard & Poor's
Long-term	Baa1	BBB+
Outlook	stable	positive
Short-term	P-2	A-2
Subordinated (Tier 2)	Ba1	BBB-
Additional Tier 1	B1(hyb)	BB
Junior Subordinated (Legacy Tier 1)	B1	BB+

STRABAG

Ratings

Berichte der Ratingagenturen (englisch) - letzte Änderung 01.08.2017

Letzte Änderung: 09. August 2017

	Standard & Poors	Moody's	Fitch
	LT / ST / Outlook	LT / ST / Outlook	LT / ST / Outlook
Erste Group Bank AG	A- / A-2 / positive	A3 / P-2 / positive	A- / F1 / stable
Public Sec. Cov. Bonds		Aaa	
Mortgage Cov. Bonds		Aaa	
Ceska sporitelna	A / A-1 / negative	A2 / P-1 / stable	A- / F1 / stable
Slovenska sporitelna			A- / F1 / stable
Mortgage Cov. Bonds			A+ / stable
Erste Bank Hungary		Baa3 / P-3 / stable	BBB / F2 / stable
Erste Mortgage Bank Mortgage Cov. Bonds			A- / stable
BCR		Baa3 / P-3 / stable	BBB+ / F2 / stable

STRABAG AG

KSV1870 Auskunft
UnternehmensProfil Compact

KSV1870

KSV1870.PRISMA PROTECT
Jetzt Zahlungsausfälle für dieses Unternehmen versichern!
Jetzt online absichern!

Ihre Anfrage: STRABAG AG
Ortenburgerstraße 27, 9800 Spittal Drau

STRABAG AG
Ortenburgerstraße 27
A-9800 Spittal Drau

Telefon:	(0043) 4762 620
Fax:	(0043) 4762 620 - 287
E-Mail:	investor.relations@strabag.com
Internet:	http://www.strabag.com

Ihre Referenz:	SA/Stojanovic Dajana
Ihr Nutzer:	PHA241
Ihre Kundennummer:	54252
Auftragsnummer:	100092227871
Ihr Auftrag von:	2017-07-13 09:30
Geliefert:	2017-07-13 09:30
KSV1870 Nummer:	**70607**
Status:	aktive Firma
Firmenbuchnummer Firmenbuchnummer:	FN 61689 w FN 61689 w
Letzte Überarbeitung:	2017-07-06

KSV1870 Bewertung

KSV1870 Rating: 270

Ausfallswahrscheinlichkeit (Basel III): 0,11 %

Einzelhöchstkredit: EUR 32.500.000,00

Zahlweise: 250

Zahlungen erfolgen im Rahmen der Fristen und Konditionen, auch unter Skontoausnutzung. Vereinzelt kommt es branchenbedingt zu Mahnungen.

Zahlungsverhalten laut letzter Überprüfung. Einflussfaktoren: Inkasso, Lieferantenauskunft, Branchenspezifika u.m. Beste Einstufung: 100, schlechteste Einstufung: 650, keine Einstufung möglich: 000.

Beurteilung: 300

Dieses Unternehmen ist Bestandteil einer Firmengruppe, wir können es daher nicht isoliert beurteilen. Die finanzielle Situation der Firmengruppe ist zufriedenstellend. Die Ertragslage war zuletzt positiv.

Finanzielle Situation laut letzter Überprüfung. Einflussfaktoren: finanzierende Stellen, Bilanzen, Grundbuch, Branchensituation u.m. Beste Einstufung: 100, schlechteste Einstufung: 650, keine Einstufung möglich: 000.

Branchenvergleich - KSV1870 Rating:

Das KSV1870 Rating des Unternehmens ist besser als der Branchendurchschnitt.

KSV1870 Rating: 270

Modell: UnternehmenScore

Risiko: sehr gering

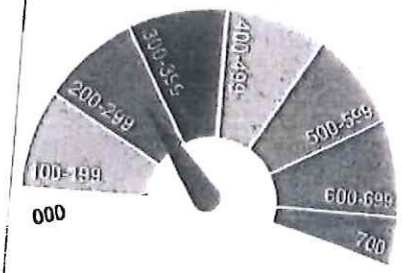

Ausfallswahrscheinlichkeit (Basel III): sehr gering

Die Ausfallswahrscheinlichkeit dieses Unternehmens beträgt 0,11 %.

Aus Bonitätsgründen spricht nichts gegen eine Aufnahme einer Geschäftsbeziehung.

Ratingklasse	000	100-199	200-299	300-349	400-499	500-599	600-699	700
Risiko	keine aktuelle Berechnung	kein Risiko	sehr geringes Risiko	geringes Risiko	erhöhtes Risiko	hohes Risiko	sehr hohes Risiko	Insolvenzkennzeichen
Wahrscheinlichkeit einer Insolvenz		ab 0,01 %	ab 0,03 %	ab 0,20 %	ab 1,30 %	ab 7,95 %	ab 36,23 %	
Erklärung (UnternehmenScore, BasisScore und NeugründerScore)	Ausfallwahrscheinlichkeit nicht berechenbar	ein Ausfall ist nicht wahrscheinlich	sehr geringe Ausfallswahrscheinlichkeit	durchschnittliche Ausfallswahrscheinlichkeit	überdurchschnittliche Ausfallswahrscheinlichkeit	hohe Ausfallswahrscheinlichkeit	sehr hohe Ausfallswahrscheinlichkeit	

© KSV1870 Information GmbH, 1120 Wien, Wagenseilgasse 7, Telefon +43 (0)50 1870-1000, Fax +43 (0)50 1870-99 1000, www.ksv.at, ksv@ksv.at

STRABAG
STRABAG AG

Branche

ÖNACE 41201 30% Wohnungs- und Siedlungsbau
ÖNACE 42132 20% Tunnelbau
ÖNACE 42131 20% Brücken- und Hochstraßenbau
ÖNACE 42110 20% Bau von Straßen
ÖNACE 43110 10% Abbrucharbeiten

Inkassofälle

Zum Inkasso übergeben am	Übergebener Betrag	Bisher bezahlter Betrag	Noch offener Betrag	Letzter Inkasso Status	Stand per
2017-01-12	EUR 636,00	EUR 636,00	EUR 0,00	Zahlung nach KSV1870 Inkasso	2017-02-09
2016-02-25	EUR 1.145,42	EUR 1.145,42	EUR 0,00	Zahlung nach KSV1870 Inkasso	2016-03-10
2016-02-23	EUR 712,63	EUR 712,63	EUR 0,00	Zahlung nach KSV1870 Inkasso	2016-04-08
2016-01-07	EUR 6.600,00	EUR 6.600,00	EUR 0,00	mit Vergleich geordnet	2016-04-27
Summen	**EUR 9.094,05**	EUR 9.094,05	EUR 0,00		

Ausgewiesene Beträge beziehen sich immer auf die übergebene Forderung. Inkassokosten können davon unabhängig bestehen und einer weiteren Betreibung unterliegen, sodass der Fall weiterhin als nicht erledigt angezeigt wird.

Allgemeine Firmeninformationen

Firmenname	STRABAG AG
Gründungsjahr	1928
Firmentyp	Bau
Rechtsform	Aktiengesellschaft seit 1999-05-26
Firmenbuchnummer	FN 61689 w
UID-Nummer	ATU 14487107

Standorte

operativ	A-9800 Spittal Drau, Ortenburgerstraße 27	Firmensitz
ehemalig	A-1010 Wien, Seilerstätte 18-20	Firmensitz,
ehemalig	A-1160 Wien, Herbststraße 6-10	Firmensitz,

© KSV1870 Information GmbH, 1120 Wien, Wagenseilgasse 7, Telefon +43 (0)50 1870-1000, Fax +43 (0)50 1870-99 1000, www.ksv.at, ksv...
ATU 64166958, DVR 3003908, FN 308571g

STRABAG
STRABAG AG

KSV1870 Rating

Auf Basis seiner einzigartigen Datenbanken und mit über 140jähriger Erfahrung als Gläubigerschutzverband entwickelt der KSV1870 seit Jahrzehnten erfolgreich qualitätsvolle, treffsichere Beurteilungsmodelle und Ratings zur zukunftsgerichteten Einschätzung der Bonität von Personen und Unternehmen. Je nach Datenlage kommen dafür unterschiedliche statistische Modelle zum Einsatz.

Modell UnternehmenScore: Es liegen recherchierte Daten vor. Zeitreihen bilden die Entwicklungen ab und, abhängig von der Rechtsform, können Bilanzdaten vorhanden sein. Ebenfalls berücksichtigt werden Informationen zum Zahlungsverhalten, Inkassodaten, etc. und in besonderer Weise fließen auch die Einschätzungen der rund 100 Info-Experten in die Beurteilungen ein.

Modell NeugründerScore: Das Unternehmen ist jünger als 12 Monate und es liegen noch keine umfassenden Daten darüber vor. Berücksichtigt werden allgemeine Informationen über die wirtschaftlich relevanten Personen des Unternehmens sowie zu Branche, Rechtsform, etc.

Modell BasisScore: Es liegen Basisdaten über die Struktur des Unternehmens vor, die laufend aktuell in die Wirtschaftsdatenbank eingespeist werden. Sofern vorhanden, werden Inkassofälle, Insolvenzmeldungen und aktuelle Bilanzen berücksichtigt.

Datenquellen

Die Daten werden teilweise tagaktuell und vollautomatisch verarbeitet, zusätzlich recherchieren über 100 Info-Experten in ganz Österreich. Individuell nach Bedarf werden dabei folgende Quellen verwendet.

Laufende oder automatisierte Verarbeitung:
- Firmenbuch und Gewerbeberechtigungsdaten
- Bilanzdaten
- Inkassodaten und Offene-Posten-Listen
- Insolvenzinformationen
- Medienmonitoring
- u.v.m.

Manuelle oder anlassbezogene Verarbeitung
- Selbstauskunft vom Unternehmen
- Referenzinformationen von Lieferanten und Geschäftspartnern
- Bankauskünfte
- Grundbuchdaten
- u.v.m.

KSV1870 Bewertung und Einzelhöchstkredit

Mit den KSV1870 Rating-Modellen bewerten wir, wie hoch das zukünftige Risiko bei einer Geschäftsverbindung ist. Dabei kann es sich keinesfalls um eine Garantie oder Zusage dahingehend handeln, dass diese Einschätzung im Einzelfall auch immer exakt so eintritt.

Der Einzelhöchstkredit beschreibt jenen Betrag, den wir als größtmögliches Obligo pro Lieferant einschätzen. Der KSV1870 ist keinesfalls mit einer Kreditversicherung gleichzusetzen. Daher kann bei eventuellen späteren Zahlungsproblemen, Nichtzahlung oder Zahlungsausfall der KSV1870 nicht haftbar gemacht werden. Die Kreditentscheidung für Lieferungen oder Leistungen bis oder über den Einzelhöchstkredit hinaus liegt allein beim Unternehmer, keinesfalls kann der KSV1870 dafür haftbar gemacht werden.

© KSV1870 Information GmbH, 1120 Wien, Wagenseilgasse 7, Telefon +43 (0)50 1870-1000, Fax +43 (0)50 1870-99 1000, www.ksv.at, ksv@ksv.at
ATU 64166958, DVR 3003908, FN 308571g

429

STRABAG
STRABAG AG

Datenschutz

Wir haben diese Auskunft mit größtmöglicher Sorgfalt, unter Einhaltung aller relevanten gesetzlichen Bestimmungen und im Einklang mit qualitätsgesicherten Prozessen, erstellt.

Diese Informationen sind nur für Ihren internen Firmengebrauch bzw. Ihren persönlichen Gebrauch bestimmt und unterliegen sowohl den Allgemeinen Geschäftsbedingungen der KSV1870 Information GmbH, als auch den Bestimmungen Ihres Vertrages.

Nach den Bestimmungen des Datenschutzgesetzes dürfen die übermittelten Informationen nur für den Zweck verarbeitet oder genutzt werden, für dessen Erfüllung sie angefordert wurden. Die Verarbeitung oder Nutzung für andere Zwecke oder für Zwecke Dritter ist ausgeschlossen und widerspricht dem Datenschutzgesetz.

Das Copyright liegt bei der KSV1870 Information GmbH und ist somit urheberrechtlich geschützt.

KSV1870 Information GmbH
Wagenseilgasse 7
1120 Wien

Bei Fragen erreichen Sie unser Customer Care Center.
T: 050 1870-1000
F: 050 1870-99 1000
ksv@ksv.at

STRABAG
STRABAG AG

Redni broj	Naziv firme	
1	Business Centar Čelebić, Podgorica	
2	MPP „Jedinstvo“ a.d. Sevojno	
3	CRNAGORAPUT a.d. Podgorica	
4	IND-EKO d.o.o. Rijeka, Hrvatska	
5	IGP „Fidija“ d.o.o. Podgorica	
6	System Engineering Team (SET) Šabac	
7	Hidroterm bk d.o.o., Ulcinj	
8	Physis Montenegro	
9	Erlang d.o.o. Podgorica	
10	Vilusi d.o.o. Nikšić	
11	Tahal Group B.V. ogranak Novi Sad	
12	Civil Engineer Podgorica	
13	EnergoInvest Sarajevo	
14	SKODA PRAHA A.S. DUHOVA-MICHLE 140 00 CZ	
15	Indel Inženjering d.o.o. Podgorica	

STRABAG
STRABAG AG

Addendum-2 to the Tender Document for Procurement of: Rehabilitation of existing and construction of new sewers

Tender No: **8733-IFT-41252**

Project name: **Danilovgrad Municipal Infrastructure Project**

Tender identification: **EBRD ME DAN 9000**

First Stage tender submission date: **07.09.2017**

Addendum date: **22.08.2017**

D.O.O. "VODOVOD I KANALIZACIJA" DANILOVGRAD

432

STRABAG
STRABAG AG

Procurement of Rehabilitation of Existing and Construction of New Sewers, for D.O.O. "Vodovod i kanalizacija" Danilovgrad, State of Montenegro, 8733-IFT-41252

This addendum is issued in accordance with Para 8 of VOLUME I.i (Instructions to Tenderers). The addendum amends and/or supplements the provisions in the tender documents. The original and the changed sections are both published here. Whenever there is a conflict, the provisions herein shall prevail over those in the tender documents.

Ref. in Tender Documents	Amended Text

VOLUME I.ii – Tender Data

12	**Tender identification**
para. 12.2(b) (original)	EBRD ME DAN 9000 The tenderer shall record on the tender envelope the Employer's name and address, the tender identification and the words "SEWERS - DO NOT OPEN BEFORE September 7th, 2017 AT 15:00"
12	**Tender identification**
para. 12.2(b) (amended)	EBRD ME DAN 9000 The tenderer shall record on the tender envelope the Employer's name and address, the tender identification and the words "SEWERS - DO NOT OPEN BEFORE September 14th, 2017 AT 15:00"

13	**Deadline for submission of First Stage tenders**
para. 13.1 (original)	September 7th, 2017 at 15:00
13	**Deadline for submission of First Stage tenders**
para. 13.1 (amended)	September 14th, 2017 at 15:00

D.O.O. "VODOVOD I KANALIZACIJA" VIK

433

STRABAG
STRABAG AG